SYNSEMI SEMICONDUCTOR

1 Watt DO-41 Hermetically Sealed Glass Zener Voltage Regulators

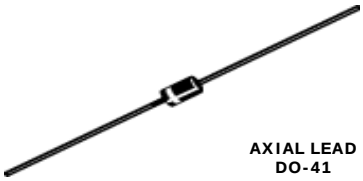

AXIAL LEAD
DO-41

Absolute Maximum Ratings

T_A = 25°C unless otherwise noted

Parameter	Value	Units
Storage Temperature Range	-65 to +200	°C
Maximum Junction Operating Temperature	+200	°C
Total Device Dissipation	1.0	Watt
Thermal Resistance Junction to Lead	53.5	°C / W
Thermal Resistance Junction to Ambient	100	°C / W
Lead Temperature (1/16" from case for 10 seconds)	+230	°C

These ratings are limiting values above which the serviceability of the diode may be impaired.

DEVICE MARKING DIAGRAM

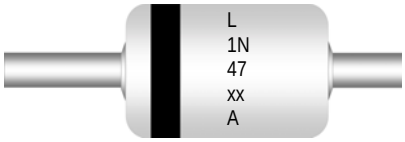

L : Logo
Device Code : 1N47xxA

Specification Features:

- Zener Voltage Range 3.3 to 56 Volts
- DO-41 Package (JEDEC)
- Through-Hole Device Type Mounting
- Hermetically Sealed Glass
- Compression Bonded Construction
- All external surfaces are corrosion resistant and leads are readily solderable
- Cathode indicated by polarity band

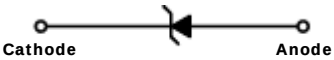

ELECTRICAL SYMBOL

Electrical Characteristics

T_A = 25°C unless otherwise noted

Device Type	V_Z @ I_{ZT} (Volts) Nominal	I_{ZT} (mA)	Z_{ZT} @ I_{ZT} (Ω) Max	I_{ZK} (mA)	Z_{ZK} @ I_{ZK} (Ω) Max	I_R @ V_R (μA) Max	V_R (Volts)
1N4728A	3.3	76	10	1	400	100	1
1N4729A	3.6	69	10	1	400	100	1
1N4730A	3.9	64	9	1	400	50	1
1N4731A	4.3	58	9	1	400	10	1
1N4732A	4.7	53	8	1	500	10	1
1N4733A	5.1	49	7	1	550	10	1
1N4734A	5.6	45	5	1	600	10	2
1N4735A	6.2	41	2	1	700	10	3
1N4736A	6.8	37	3.5	1	700	10	4
1N4737A	7.5	34	4	0.5	700	10	5
1N4738A	8.2	31	4.5	0.5	700	10	6
1N4739A	9.1	28	5	0.5	700	10	7
1N4740A	10	25	7	0.25	700	10	7.6
1N4741A	11	23	8	0.25	700	5	8.4
1N4742A	12	21	9	0.25	700	5	9.1
1N4743A	13	19	10	0.25	700	5	9.9
1N4744A	15	17	14	0.25	700	5	11.4
1N4745A	16	15.5	16	0.25	700	5	12.2
1N4746A	18	14	20	0.25	700	5	13.7
1N4747A	20	12.5	22	0.25	750	5	15.2
1N4748A	22	11.5	23	0.25	750	5	16.7

Electrical Characteristics

T_A = 25°C unless otherwise noted

Device Type	V_Z @ I_{ZT} (Volts) Nominal	I_{ZT} (mA)	Z_{ZT} @ I_{ZT} (Ω) Max	I_{ZK} (mA)	Z_{ZK} @ I_{ZK} (Ω) Max	I_R @ V_R (μA) Max	V_R (Volts)
1N4749A	24	10.5	25	0.25	750	5	18.2
1N4750A	27	9.5	35	0.25	750	5	20.6
1N4751A	30	8.5	40	0.25	1000	5	22.8
1N4752A	33	7.5	45	0.25	1000	5	25.1
1N4753A	36	7	50	0.25	1000	5	27.4
1N4754A	39	6.5	60	0.25	1000	5	29.7
1N4755A	43	6	70	0.25	1500	5	32.7
1N4756A	47	5.5	80	0.25	1500	5	35.8
1N4757A	51	5	95	0.25	1500	5	38.8
1N4758A	56	4.5	110	0.25	2000	5	42.6

V_F Forward Voltage = 1.2 V Maximum @ I_F = 200 mA for all types

Notes:

1. The device numbers listed have a standard tolerance on the nominal zener voltage of ±5%.
2. For detailed information on price, availability and delivery of nominal zener voltages between the voltages shown and tighter voltage tolerances, contact your nearest Synsemi representative.
3. The zener impedance is derived from the 60-cycle ac voltage, which results when an ac current having an rms value equal to 10% of the dc zener current (I_{ZT} or I_{ZK}) is superimposed to I_{ZT} or I_{ZK}.

Electrical Symbol Definition

Symbol	Parameter
V_Z	Reverse Zener Voltage @ I_{ZT}
I_{ZT}	Reverse Current
Z_{ZT}	Maximum Zener Impedance @ I_{ZT}
I_{ZK}	Reverse Current
Z_{ZK}	Maximum Zener Impedance @ I_{ZK}
I_R	Reverse Leakage Current @ V_R
V_R	Breakdown Voltage
I_F	Forward Current
V_F	Forward Voltage @ I_F

Typical Characteristics

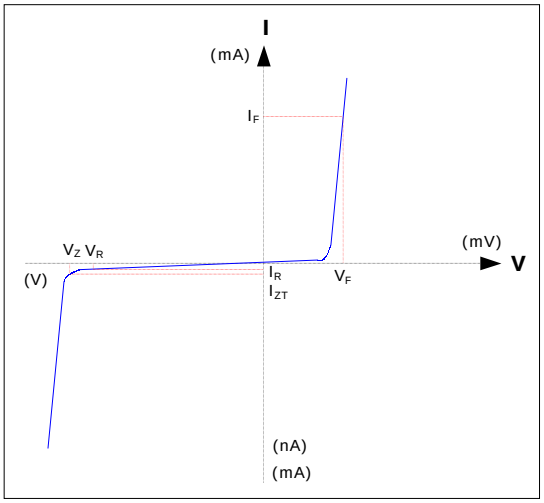

Ordering Information

Device	Package	Quantity
1N47xxA	Bulk	5,000
1N47xxA.TB	Tape and Ammo	3,000
1N47xxA.TR	Tape and Reel	5,000

Tape & Reel Packaging Information

Tape & Reel Outline

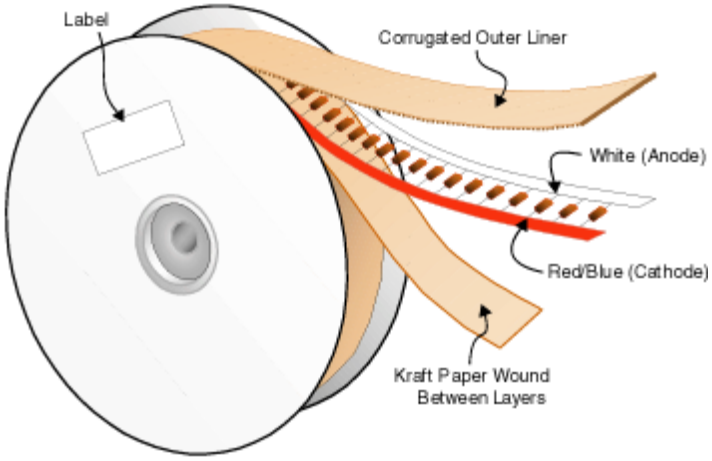

Reel Dimensions

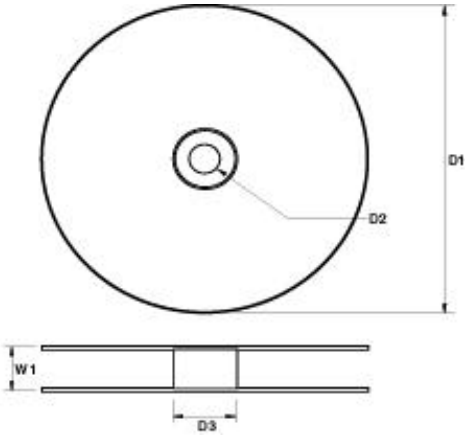

DIM	Millimeters
D1	356
D2	30
D3	84
W1	77.5

Quantity Per Reel

PKG Type	Quantity Per Reel
DO-41	5,000

SYNSEMI SEMICONDUCTOR

Tape & Ammo Packaging Information

Tape & Ammo Outline

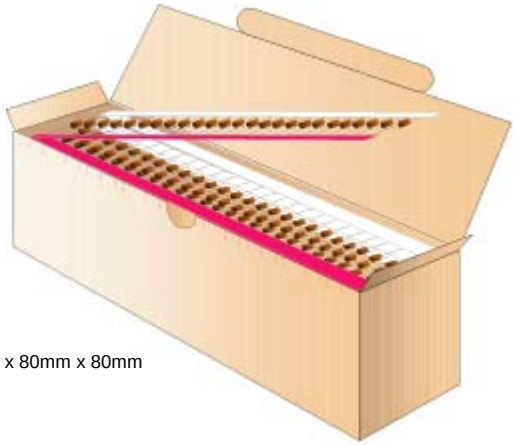

250mm x 80mm x 80mm

Quantity Per Ammo Box

PKG Type	Quantity Per Box
DO-41	3,000

Taping Dimensions

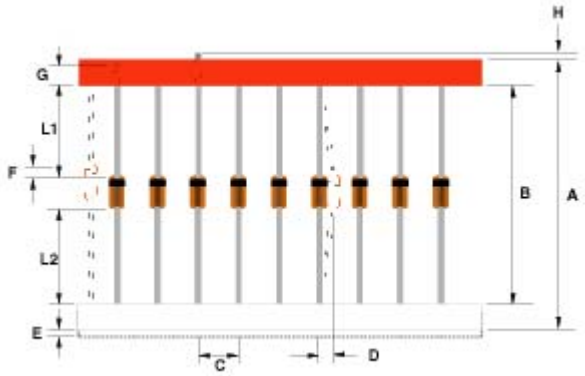

Description	Millimeters	
Standard Width	52	26
Tape Spacing (B)	52 ± 0.69	26 +0.5 / -0
Component Pitch (C)	5.08 ± 0.4	5.08 ± 0.4
Untaped Lead (L1 – L2)	± 0.69	± 0.69
Glass Offset (F)	± 0.69	± 0.69
Bent (D)	1.2 Max	1.2 Max
Tape Width (G)	6.138 ± 0.576	6.138 ± 0.576
Tape Mismatch (E)	0.55 Max	0.55 Max
Taped Lead (G)	3.2 Min	3.2 Min
Lead Beyond Tape (H)	0	0

Bulk Packaging Information

Bulk Outline

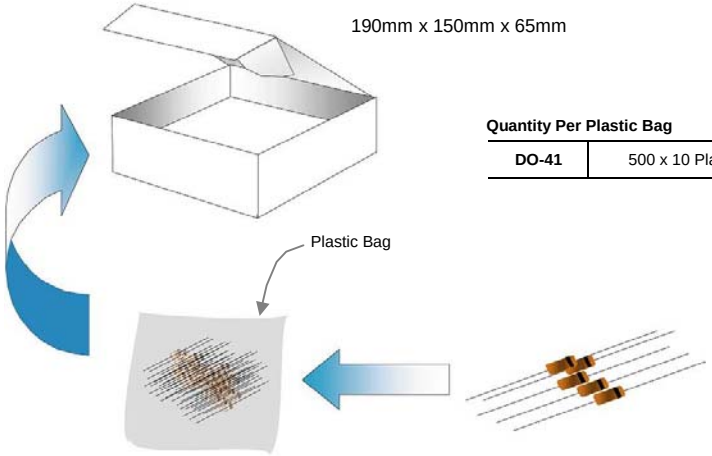

Quantity Per Plastic Bag

DO-41	500 x 10 Plastic Bag

Quantity Per Box

PKG Type	Quantity Per Box
DO-41	5,000

Package Outline

Package	Case Outline
DO-41	

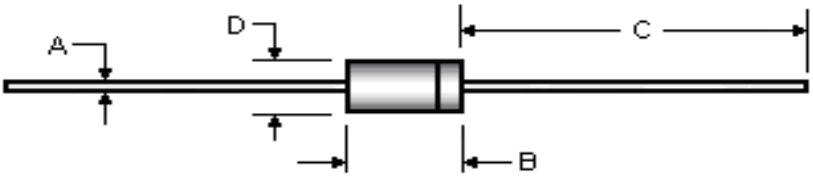

DIM	D0-41			
	Millimeters		Inches	
	Min	Max	Min	Max
A	0.72	0.86	0.028	0.034
B	4.07	5.20	0.160	0.205
C	25.40	---	1.000	---
D	2.04	2.71	0.080	0.107

Notes:

1. All dimensions are within JEDEC standard.
2. DO41 polarity denoted by cathode band.