Octal 12-/10-/8-Bit I²C V_{OUT} DACs with 10ppm/°C Reference

FEATURES

- Integrated Precision Reference:
  - 2.5V Full-Scale 10ppm/°C (LTC2637-L)
  - 4.096V Full-Scale 10ppm/°C (LTC2637-H)
- Maximum INL Error: 2.5LSB (LTC2637-12)
- Low Noise: 0.75mV$_{P-P}$ 0.1Hz to 200KHz
- Guaranteed Monotonic Over –40°C to 125°C Temperature Range
- Selectable Internal or External Reference
- 2.7V to 5.5V Supply Range (LTC2637-L)
- Ultralow Crosstalk Between DACs (<3nV•s)
- Low Power: 100µA per DAC at 3V (LTC2637-L)
- Power-On-Reset to Zero-Scale/Mid-Scale
- Double-Buffered Data Latches
- Tiny 14-Lead 4mm × 3mm DFN and 16-Lead MSOP Packages

APPLICATIONS

- Mobile Communications
- Process Control and Industrial Automation
- Automatic Test Equipment
- Portable Equipment
- Automotive
- Optical Networking

DESCRIPTION

The LTC®2637 is a family of octal 12-, 10-, and 8-bit voltage-output DACs with an integrated, high-accuracy, low-drift 10ppm/°C reference in 14-lead DFN and 16-lead MSOP packages. It has a rail-to-rail output buffer and is guaranteed monotonic. The LTC2637-L has a full-scale output of 2.5V, and operates from a single 2.7V to 5.5V supply. The LTC2637-H has a full-scale output of 4.096V, and operates from a 4.5V to 5.5V supply. Each DAC can also operate with an external reference, which sets the DAC full-scale output to the external reference voltage.

These DACs communicate via a 2-wire I²C-compatible serial interface. The LTC2637 operates in both the standard mode (clock rate of 100kHz) and the fast mode (clock rate of 400kHz). The LTC2637 incorporates a power-on reset circuit. Options are available for reset to zero-scale or reset to mid-scale in internal reference mode, or reset to mid-scale in external reference mode after power-up.

, LT, LTC, LTM, Linear Technology and the Linear logo are registered trademarks of Linear Technology Corporation. All other trademarks are the property of their respective owners. Protected by U.S. Patents including 5396245, 5859606, 6891433, 6937178, 7414561.

BLOCK DIAGRAM

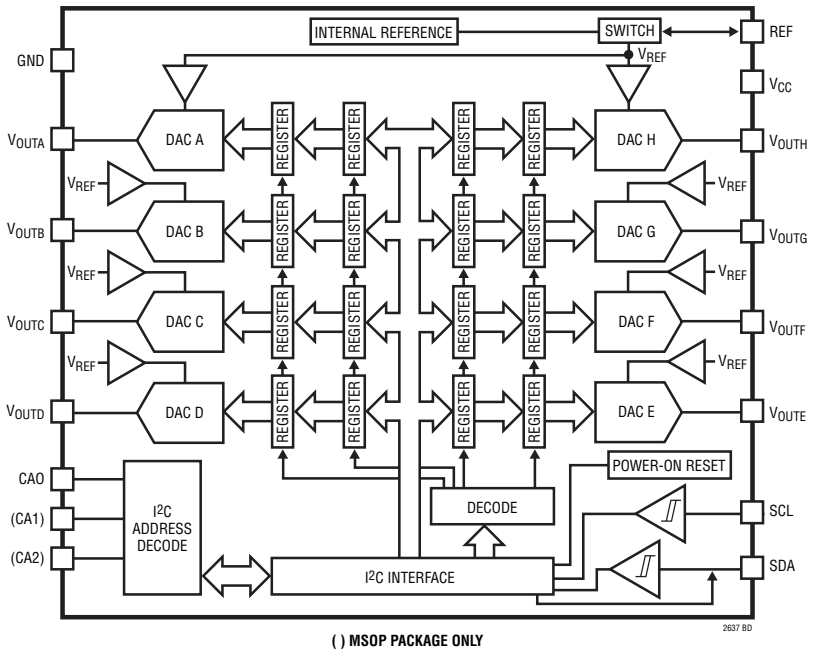

( ) MSOP PACKAGE ONLY

Integral Nonlinearity (LTC2637-LZ12)

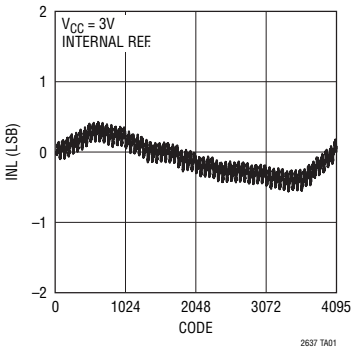

ABSOLUTE MAXIMUM RATINGS (Notes 1, 2)

Supply Voltage (V_{CC}) ..... –0.3V to 6V
SCL, SDA ..... –0.3V to 6V
V_{OUTA} - V_{OUTH},
CA0, CA1, CA2..... –0.3V to Min(V_{CC} + 0.3V, 6V)
REF ..... –0.3V to Min(V_{CC} + 0.3V, 6V)
Operating Temperature Range
LTC2637C ..... 0°C to 70°C
LTC2637I ..... –40°C to 85°C
LTC2637H (Note 3) ..... –40°C to 125°C
Maximum Junction Temperature ..... 150°C
Storage Temperature Range ..... –65°C to 150°C
Lead Temperature (Soldering, 10 sec)
MS Package ..... 300°C

PIN CONFIGURATION

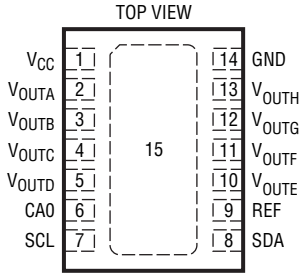

DE PACKAGE
14-LEAD (4mm × 3mm) PLASTIC DFN
T_{JMAX} = 150°C, θ_{JA} = 37°C/W
EXPOSED PAD (PIN 15) IS GND, MUST BE SOLDERED TO PCB

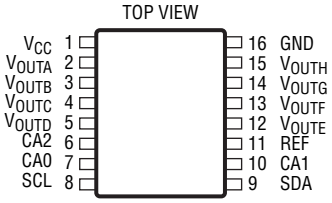

MS PACKAGE
16-LEAD (4mm × 5mm) PLASTIC MSOP
T_{JMAX} = 150°C, θ_{JA} = 110°C/W

ORDER INFORMATION

LTC2637 C DE –L Z 12 #TR PBF

LEAD FREE DESIGNATOR

TAPE AND REEL
TR = 2500-Piece Tape and Reel

RESOLUTION
12 = 12-Bit
10 = 10-Bit
8 = 8-Bit

POWER-ON RESET
MI = Reset to Mid-Scale in Internal Reference Mode
MX = Reset to Mid-Scale in External Reference Mode
Z = Reset to Zero-Scale in Internal Reference Mode

FULL-SCALE VOLTAGE, INTERNAL REFERENCE MODE
L = 2.5V
H = 4.096V

PACKAGE TYPE
DE = 14-Lead DFN
MS = 16-Lead MSOP

TEMPERATURE GRADE
C = Commercial Temperature Range (0°C to 70°C)
I = Industrial Temperature Range (–40°C to 85°C)
H = Automotive Temperature Range (–40°C to 125°C)

PRODUCT PART NUMBER

Consult LTC Marketing for information on non-standard lead based finish parts.

For more information on lead free part marking, go to: http://www.linear.com/leadfree/
For more information on tape and reel specifications, go to: http://www.linear.com/tapeandreel/

PRODUCT SELECTION GUIDE

PART NUMBER	PART MARKING*		V_{FS} WITH INTERNAL REFERENCE	POWER-ON RESET TO CODE	POWER-ON REFERENCE MODE	RESOLUTION	V_{CC}	MAXIMUM INL
	DFN	MSOP						
LTC2637-LMI12	7LMI2	7LMI12	2.5V • (4095/4096)	Mid-Scale	Internal	12-Bit	2.7V to 5.5V	±2.5LSB
LTC2637-LMI10	7LMI1	7LMI10	2.5V • (1023/1024)	Mid-Scale	Internal	10-Bit	2.7V to 5.5V	±1LSB
LTC2637-LMI8	7LMI8	37LMI8	2.5V • (255/256)	Mid-Scale	Internal	8-Bit	2.7V to 5.5V	±0.5LSB
LTC2637-LMX12	7LMX2	7LMX12	2.5V • (4095/4096)	Mid-Scale	External	12-Bit	2.7V to 5.5V	±2.5LSB
LTC2637-LMX10	7LMX1	7LMX10	2.5V • (1023/1024)	Mid-Scale	External	10-Bit	2.7V to 5.5V	±1LSB
LTC2637-LMX8	7LMX8	37LMX8	2.5V • (255/256)	Mid-Scale	External	8-Bit	2.7V to 5.5V	±0.5LSB
LTC2637-LZ12	7LZ12	37LZ12	2.5V • (4095/4096)	Zero-Scale	Internal	12-Bit	2.7V to 5.5V	±2.5LSB
LTC2637-LZ10	7LZ10	37LZ10	2.5V • (1023/1024)	Zero-Scale	Internal	10-Bit	2.7V to 5.5V	±1LSB
LTC2637-LZ8	37LZ8	637LZ8	2.5V • (255/256)	Zero-Scale	Internal	8-Bit	2.7V to 5.5V	±0.5LSB
LTC2637-HMI12	7HMI2	7HMI12	4.096V • (4095/4096)	Mid-Scale	Internal	12-Bit	4.5V to 5.5V	±2.5LSB
LTC2637-HMI10	7HMI1	7HMI10	4.096V • (1023/1024)	Mid-Scale	Internal	10-Bit	4.5V to 5.5V	±1LSB
LTC2637-HMI8	7HMI8	37HMI8	4.096V • (255/256)	Mid-Scale	Internal	8-Bit	4.5V to 5.5V	±0.5LSB
LTC2637-HMX12	7HMX2	7HMX12	4.096V • (4095/4096)	Mid-Scale	External	12-Bit	4.5V to 5.5V	±2.5LSB
LTC2637-HMX10	7HMX1	7HMX10	4.096V • (1023/1024)	Mid-Scale	External	10-Bit	4.5V to 5.5V	±1LSB
LTC2637-HMX8	7HMX8	37HMX8	4.096V • (255/256)	Mid-Scale	External	8-Bit	4.5V to 5.5V	±0.5LSB
LTC2637-HZ12	7HZ12	37HZ12	4.096V • (4095/4096)	Zero-Scale	Internal	12-Bit	4.5V to 5.5V	±2.5LSB
LTC2637-HZ10	7HZ10	37HZ10	4.096V • (1023/1024)	Zero-Scale	Internal	10-Bit	4.5V to 5.5V	±1LSB
LTC2637-HZ8	37HZ8	637HZ8	4.096V • (255/256)	Zero-Scale	Internal	8-Bit	4.5V to 5.5V	±0.5LSB

*Above options are available in a 14-lead DFN package (LTC2637xDE) or 16-lead MSOP package (LTC2637xMS).

ELECTRICAL CHARACTERISTICS

The ● denotes the specifications which apply over the full operating temperature range, otherwise specifications are at T_A = 25°C. V_{CC} = 2.7V to 5.5V, V_{OUT} unloaded unless otherwise specified.

LTC2637-LMI12/ LTC2637-LMI10/ LTC2637-LMI8/ LTC2637-LMX12/ LTC2637-LMX10/ LTC2637-LMX8/ LTC2637-LZ12/ LTC2637-LZ10/ LTC2637-LZ8 (V_{FS} = 2.5V)

SYMBOL	PARAMETER	CONDITIONS		LTC2637-8 MIN	LTC2637-8 TYP	LTC2637-8 MAX	LTC2637-10 MIN	LTC2637-10 TYP	LTC2637-10 MAX	LTC2637-12 MIN	LTC2637-12 TYP	LTC2637-12 MAX	UNITS
	Resolution		●	8			10			12			Bits
	Monotonicity	V_{CC} = 3V, Internal Reference (Note 4)	●	8			10			12			Bits
DNL	Differential Nonlinearity	V_{CC} = 3V, Internal Reference (Note 4)	●			±0.5			±0.5			±1	LSB
INL	Integral Nonlinearity	V_{CC} = 3V, Internal Reference (Note 4)	●		±0.05	±0.5		±0.2	±1		±1	±2.5	LSB
ZSE	Zero-Scale Error	V_{CC} = 3V, Internal Reference, Code = 0	●		0.5	5		0.5	5		0.5	5	mV
V_{OS}	Offset Error	V_{CC} = 3V, Internal Reference (Note 5)	●		±0.5	±5		±0.5	±5		±0.5	±5	mV
V_{OSTC}	V_{OS} Temperature Coefficient	V_{CC}=3V, Internal Reference			±10			±10			±10		μV/°C
GE	Gain Error	V_{CC} = 3V, Internal Reference	●		±0.2	±0.8		±0.2	±0.8		±0.2	±0.8	%FSR
GE_{TC}	Gain Temperature Coefficient	V_{CC} = 3V, Internal Reference (Note 10) C-Grade I-Grade H-Grade			 10 10 10			 10 10 10			 10 10 10		 ppm/°C ppm/°C ppm/°C
	Load Regulation	Internal Reference, Mid-Scale, V_{CC} = 3V±10%, –5mA ≤ I_{OUT} ≤ 5mA V_{CC} = 5V±10%, (Note 15) –10mA ≤ I_{OUT} ≤ 10mA	 ● ●		 0.009 0.009	 0.016 0.016		 0.035 0.035	 0.064 0.064		 0.14 0.14	 0.256 0.256	 LSB/mA LSB/mA
R_{OUT}	DC Output Impedance	Internal Reference, Mid-Scale, V_{CC} = 3V±10%, –5mA ≤ I_{OUT} ≤ 5mA V_{CC} = 5V±10%, (Note 15) –10mA ≤ I_{OUT} ≤ 10mA	 ● ●		 0.09 0.09	 0.156 0.156		 0.09 0.09	 0.156 0.156		 0.09 0.09	 0.156 0.156	 Ω Ω

SYMBOL	PARAMETER	CONDITIONS		MIN	TYP	MAX	UNITS
V_{OUT}	DAC Output Span	External Reference Internal Reference			0 to V_{REF} 0 to 2.5		V V
PSR	Power Supply Rejection	V_{CC} = 3V±10% or 5V±10%			–80		dB
I_{SC}	Short Circuit Output Current (Note 6) Sinking Sourcing	V_{FS} = V_{CC} = 5.5V Zero-Scale; V_{OUT} shorted to V_{CC} Full-Scale; V_{OUT} shorted to GND	 ● ●		 27 –28	 48 –48	 mA mA
Power Supply							
V_{CC}	Positive Supply Voltage	For Specified Performance	●	2.7		5.5	V
I_{CC}	Supply Current (Note 7)	V_{CC} = 3V, V_{REF} =2.5V, External Reference V_{CC} = 3V, Internal Reference V_{CC} = 5V, V_{REF} =2.5V, External Reference V_{CC} = 5V, Internal Reference	● ● ● ●		0.8 0.9 0.9 1	1.1 1.3 1.3 1.5	mA mA mA mA
I_{SD}	Supply Current in Power-Down Mode (Note 7)	V_{CC} = 5V, C-Grade, I-Grade V_{CC} = 5V, H-Grade	● ●		1 1	20 30	μA μA

ELECTRICAL CHARACTERISTICS

The ● denotes the specifications which apply over the full operating temperature range, otherwise specifications are at T_A = 25°C. V_{CC} = 2.7V to 5.5V, V_{OUT} unloaded unless otherwise specified.

LTC2637-LMI12/ LTC2637-LMI10/ LTC2637-LMI8/ LTC2637-LMX12/ LTC2637-LMX10/ LTC2637-LMX8/ LTC2637-LZ12/ LTC2637-LZ10/ LTC2637-LZ8 (V_{FS} = 2.5V)

SYMBOL	PARAMETER	CONDITIONS		MIN	TYP	MAX	UNITS
Reference Input							
	Input Voltage Range		●	1		V_{CC}	V
	Resistance		●	120	160	200	kΩ
	Capacitance				12		pF
I_{REF}	Reference Current, Power-Down Mode	DAC Powered Down	●		0.005	1.5	µA
Reference Output							
	Output Voltage		●	1.24	1.25	1.26	V
	Reference Temperature Coefficient				±10		ppm/°C
	Output Impedance				0.5		kΩ
	Capacitive Load Driving				10		µF
	Short Circuit Current	V_{CC} = 5.5V; REF Shorted to GND			2.5		mA
Digital I/O							
V_{IL}	Low Level Input Voltage (SDA and SCL)	(Note 14)	●	–0.5		$0.3V_{CC}$	V
V_{IH}	High Level Input Voltage (SDA and SCL)	(Note 11)	●	$0.7V_{CC}$			V
$V_{IL(CAn)}$	Low Level Input Voltage on CA*n* (n = 0, 1, 2)	See Test Circuit 1	●			$0.15V_{CC}$	V
$V_{IH(CAn)}$	High Level Input Voltage on CA*n* (n = 0, 1, 2)	See Test Circuit 1	●	$0.85V_{CC}$			V
R_{INH}	Resistance from CA*n* (n=0, 1,2) to V_{CC} to Set CA*n* = V_{CC}	See Test Circuit 2	●			10	kΩ
R_{INL}	Resistance from CA*n* (n=0, 1,2) to GND to Set CA*n* = GND	See Test Circuit 2	●			10	kΩ
R_{INF}	Resistance from CA*n* (n=0, 1,2) to V_{CC} or GND to Set CA*n* = Float	See Test Circuit 2	●	2			MΩ
V_{OL}	Low Level Output Voltage	Sink Current = 3mA	●	0		0.4	V
t_{OF}	Output Fall Time	$V_O = V_{IH(MIN)}$ to $V_O = V_{IL(MAX)}$, C_B = 10pF to 400pF (Note 12)	●	$20 + 0.1C_B$		250	ns
t_{SP}	Pulse Width of Spikes Suppressed by Input Filter		●	0		50	ns
I_{IN}	Input Leakage	$0.1V_{CC} \le V_{IN} \le 0.9V_{CC}$	●			±1	µA
C_{IN}	I/O Pin Capacitance	(Note 8)	●			10	pF
C_B	Capacitive Load for Each Bus Line		●			400	pF
C_{CAn}	External Capacitive Load on Address Pin CA*n* (n=0, 1,2)		●			10	pF

ELECTRICAL CHARACTERISTICS

The ● denotes the specifications which apply over the full operating temperature range, otherwise specifications are at T_A = 25°C. V_{CC} = 2.7V to 5.5V, V_{OUT} unloaded unless otherwise specified.

LTC2637-LMI12/ LTC2637-LMI10/ LTC2637-LMI8/ LTC2637-LMX12/ LTC2637-LMX10/ LTC2637-LMX8/ LTC2637-LZ12/ LTC2637-LZ10/ LTC2637-LZ8 (V_{FS} = 2.5V)

SYMBOL	PARAMETER	CONDITIONS		MIN	TYP	MAX	UNITS
AC Performance							
t_S	Settling Time	V_{CC} = 3V (Note 9) ±0.39% (±1LSB at 8 Bits) ±0.098% (±1LSB at 10 Bits) ±0.024% (±1LSB at 12 Bits)			 3.5 4.1 4.5		 µs µs µs
	Voltage Output Slew Rate				1.0		V/µs
	Capacitive Load Driving				500		pF
	Glitch Impulse	At Mid-Scale Transition			2.1		nV•s
	DAC-to-DAC Crosstalk	1 DAC held at FS, 1 DAC Switched 0 to FS			2.6		nV•s
	Multiplying Bandwidth	External Reference			320		kHz
e_n	Output Voltage Noise Density	At f = 1kHz, External Reference At f = 10kHz, External Reference At f = 1kHz, Internal Reference At f = 10kHz, Internal Reference			180 160 200 180		nV/√Hz nV/√Hz nV/√Hz nV/√Hz
	Output Voltage Noise	0.1Hz to 10Hz, External Reference 0.1Hz to 10Hz, Internal Reference 0.1Hz to 200kHz, External Reference 0.1Hz to 200kHz, Internal Reference			35 40 680 730		μV_{P-P} μV_{P-P} μV_{P-P} μV_{P-P}

TIMING CHARACTERISTICS

The ● denotes the specifications which apply over the full operating temperature range, otherwise specifications are at T_A = 25°C. V_{CC} = 2.7V to 5.5V. (See Figure 1) (Note 13)

LTC2637-LMI12/ LTC2637-LMI10/ LTC2637-LMI8/ LTC2637-LMX12/ LTC2637-LMX10/ LTC2637-LMX8/ LTC2637-LZ12/ LTC2637-LZ10/ LTC2637-LZ8 (V_{FS} = 2.5V)

SYMBOL	PARAMETER	CONDITIONS		MIN	TYP	MAX	UNITS
f_{SCL}	SCL Clock Frequency		●	0		400	kHz
$t_{HD(STA)}$	Hold Time (Repeated) Start Condition		●	0.6			µs
t_{LOW}	Low Period of the SCL Clock Pin		●	1.3			µs
t_{HIGH}	High Period of the SCL Clock Pin		●	0.6			µs
$t_{SU(STA)}$	Set-Up Time for a Repeated Start Condition		●	0.6			µs
$t_{HD(DAT)}$	Data Hold Time		●	0		0.9	µs
$t_{SU(DAT)}$	Data Set-Up Time		●	100			ns
t_r	Rise Time of Both SDA and SCL Signals	(Note 12)	●	$20 + 0.1C_B$		300	ns
t_f	Fall Time of Both SDA and SCL Signals	(Note 12)	●	$20 + 0.1C_B$		300	ns
$t_{SU(STO)}$	Set-Up Time for Stop Condition		●	0.6			µs
t_{BUF}	Bus Free Time Between a Stop and Start Condition		●	1.3			µs

ELECTRICAL CHARACTERISTICS

The ● denotes the specifications which apply over the full operating temperature range, otherwise specifications are at T_A = 25°C. V_{CC} = 4.5V to 5.5V, V_{OUT} unloaded unless otherwise specified.

LTC2637-HMI12/ LTC2637-HMI10/ LTC2637-HMI8/ LTC2637-HMX12/ LTC2637-HMX10/ LTC2637-HMX8/ LTC2637-HZ12/ LTC2637-HZ10/ LTC2637-HZ8 (V_{FS} =4.096V)

				LTC2637-8			LTC2637-10			LTC2637-12			
SYMBOL	**PARAMETER**	**CONDITIONS**		**MIN**	**TYP**	**MAX**	**MIN**	**TYP**	**MAX**	**MIN**	**TYP**	**MAX**	**UNITS**
	Resolution		●	8			10			12			Bits
	Monotonicity	V_{CC} = 5V, Internal Reference (Note 4)	●	8			10			12			Bits
DNL	Differential Nonlinearity	V_{CC} = 5V, Internal Reference (Note 4)	●			±0.5			±0.5			±1	LSB
INL	Integral Nonlinearity	V_{CC} = 5V, Internal Reference (Note 4)	●		±0.05	±0.5		±0.2	±1		±1	±2.5	LSB
ZSE	Zero-Scale Error	V_{CC} = 5V, Internal Reference, Code = 0	●		0.5	5		0.5	5		0.5	5	mV
V_{OS}	Offset Error	V_{CC} = 5V, Internal Reference (Note 5)	●		±0.5	±5		±0.5	±5		±0.5	±5	mV
V_{OSTC}	V_{OS} Temperature Coefficient	V_{CC} = 5V, Internal Reference			±10			±10			±10		μV/°C
GE	Gain Error	V_{CC} = 5V, Internal Reference	●		±0.2	±0.8		±0.2	±0.8		±0.2	±0.8	%FSR
GE_{TC}	Gain Temperature Coefficient	V_{CC} = 5V, Internal Reference (Note 10) C-Grade I-Grade H-Grade			 10 10 10			 10 10 10			 10 10 10		 ppm/°C ppm/°C ppm/°C
	Load Regulation	V_{CC} = 5V±10%, (Note 15) Internal Reference, Mid-Scale, –10mA ≤ I_{OUT} ≤ 10mA	●		0.006	0.01		0.022	0.04		0.09	0.16	LSB/mA
R_{OUT}	DC Output Impedance	V_{CC} = 5V±10%, (Note 15) Internal Reference, Mid-Scale, –10mA ≤ I_{OUT} ≤ 10mA	●		0.09	0.156		0.09	0.156		0.09	0.156	Ω

SYMBOL	**PARAMETER**	**CONDITIONS**		**MIN**	**TYP**	**MAX**	**UNITS**
V_{OUT}	DAC Output Span	External Reference Internal Reference			0 to V_{REF} 0 to 4.096		V V
PSR	Power Supply Rejection	V_{CC} = 5V±10%			–80		dB
I_{SC}	Short Circuit Output Current (Note 6) Sinking Sourcing	V_{FS} = V_{CC} = 5.5V Zero-Scale; V_{OUT} Shorted to V_{CC} Full-Scale; V_{OUT} Shorted to GND	 ● ●		 27 –28	 48 –48	 mA mA
Power Supply							
V_{CC}	Positive Supply Voltage	For Specified Performance	●	4.5		5.5	V
I_{CC}	Supply Current (Note 7)	V_{CC} = 5V, V_{REF} = 4.096V, External Reference V_{CC} = 5V, Internal Reference	● ●		1.0 1.1	1.3 1.5	mA mA
I_{SD}	Supply Current in Power-Down Mode (Note 7)	V_{CC} = 5V, C-Grade, I-Grade V_{CC} = 5V, H-Grade	● ●		1 1	20 30	μA μA
Reference Input							
	Input Voltage Range		●	1		V_{CC}	V
	Resistance		●	120	160	200	kΩ
	Capacitance				12		pF
I_{REF}	Reference Current, Power-Down Mode	DAC Powered Down	●		0.005	1.5	μA
Reference Output							
	Output Voltage		●	2.032	2.048	2.064	V
	Reference Temperature Coefficient				±10		ppm/°C

ELECTRICAL CHARACTERISTICS

The ● denotes the specifications which apply over the full operating temperature range, otherwise specifications are at T_A = 25°C. V_{CC} = 4.5V to 5.5V, V_{OUT} unloaded unless otherwise specified.

LTC2637-HMI12/ LTC2637-HMI10/ LTC2637-HMI8/ LTC2637-HMX12/ LTC2637-HMX10/ LTC2637-HMX8/ LTC2637-HZ12/ LTC2637-HZ10/ LTC2637-HZ8 (V_{FS} =4.096V)

SYMBOL	PARAMETER	CONDITIONS		MIN	TYP	MAX	UNITS
	Output Impedance				0.5		kΩ
	Capacitive Load Driving				10		µF
	Short Circuit Current	V_{CC} = 5.5V; REF Shorted to GND			4		mA
Digital I/O							
V_{IL}	Low Level Input Voltage (SDA and SCL)	(Note 14)	●	–0.5		$0.3V_{CC}$	V
V_{IH}	High Level Input Voltage (SDA and SCL)	(Note 11)	●	$0.7V_{CC}$			V
$V_{IL(CAn)}$	Low Level Input Voltage on CA*n* (n = 0, 1, 2)	See Test Circuit 1	●			$0.15V_{CC}$	V
$V_{IH(CAn)}$	High Level Input Voltage on CA*n* (n = 0, 1, 2)	See Test Circuit 1	●	$0.85V_{CC}$			V
R_{INH}	Resistance from CA*n* (n=0, 1,2) to V_{CC} to Set CA*n* = V_{CC}	See Test Circuit 2	●			10	kΩ
R_{INL}	Resistance from CA*n* (n=0, 1,2) to GND to Set CA*n* = GND	See Test Circuit 2	●			10	kΩ
R_{INF}	Resistance from CA*n* (n=0, 1,2) to V_{CC} or GND to Set CA*n* = Float	See Test Circuit 2	●	2			MΩ
V_{OL}	Low Level Output Voltage	Sink Current = 3mA	●	0		0.4	V
t_{OF}	Output Fall Time	$V_O = V_{IH(MIN)}$ to $V_O = V_{IL(MAX)}$, C_B = 10pF to 400pF (Note 12)	●	$20 + 0.1C_B$		250	ns
t_{SP}	Pulse Width of Spikes Suppressed by Input Filter		●	0		50	ns
I_{IN}	Input Leakage	$0.1V_{CC} \le V_{IN} \le 0.9V_{CC}$	●			±1	µA
C_{IN}	I/O Pin Capacitance	(Note 8)	●			10	pF
C_B	Capacitive Load for Each Bus Line		●			400	pF
C_{CAn}	External Capacitive Load on Address Pin CA*n* (n=0, 1,2)		●			10	pF
AC Performance							
t_S	Settling Time	V_{CC} = 3V (Note 9) ±0.39% (±1LSB at 8 Bits) ±0.098% (±1LSB at 10 Bits) ±0.024% (±1LSB at 12 Bits)			 3.9 4.3 5		 µs µs µs
	Voltage Output Slew Rate				1		V/µs
	Capacitive Load Driving				500		pF
	Glitch Impulse	At Mid-Scale Transition			3		nV•s
	DAC-to-DAC Crosstalk	1 DAC held at FS, 1 DAC Switched 0 to FS			3		nV•s
	Multiplying Bandwidth	External Reference			320		kHz
e_n	Output Voltage Noise Density	At f = 1kHz, External Reference At f = 10kHz, External Reference At f = 1kHz, Internal Reference At f = 10kHz, Internal Reference			180 160 250 230		nV/√Hz nV/√Hz nV/√Hz nV/√Hz
	Output Voltage Noise	0.1Hz to 10Hz, External Reference 0.1Hz to 10Hz, Internal Reference 0.1Hz to 200kHz, External Reference 0.1Hz to 200kHz, Internal Reference			35 50 680 750		μV_{P-P} μV_{P-P} μV_{P-P} μV_{P-P}

TIMING CHARACTERISTICS

The ● denotes specifications that apply over the full operating temperature range, otherwise specifications are at T_A = 25°C. V_{CC} =4.5V to 5.5V. (See Figure 1) (Note 13).

LTC2637-HMI12/ LTC2637-HMI10/ LTC2637-HMI8/ LTC2637-HMX12/ LTC2637-HMX10/ LTC2637-HMX8/ LTC2637-HZ12/ LTC2637-HZ10/ LTC2637-HZ8 (V_{FS} =4.096V)

SYMBOL	PARAMETER	CONDITIONS		MIN	TYP	MAX	UNITS
f_{SCL}	SCL Clock Frequency		●	0		400	kHz
$t_{HD(STA)}$	Hold Time (Repeated) Start Condition		●	0.6			µs
t_{LOW}	Low Period of the SCL Clock Pin		●	1.3			µs
t_{HIGH}	High Period of the SCL Clock Pin		●	0.6			µs
$t_{SU(STA)}$	Set-Up Time for a Repeated Start Condition		●	0.6			µs
$t_{HD(DAT)}$	Data Hold Time		●	0		0.9	µs
$t_{SU(DAT)}$	Data Set-Up Time		●	100			ns
t_r	Rise Time of Both SDA and SCL Signals	(Note 12)	●	$20 + 0.1C_B$		300	ns
t_f	Fall Time of Both SDA and SCL Signals	(Note 12)	●	$20 + 0.1C_B$		300	ns
$t_{SU(STO)}$	Set-Up Time for Stop Condition		●	0.6			µs
t_{BUF}	Bus Free Time Between a Stop and Start Condition		●	1.3			µs

Note 1: Stresses beyond those listed under Absolute Maximum Ratings may cause permanent damage to the device. Exposure to any Absolute Maximum Rating condition for extended periods may affect device reliability and lifetime.

Note 2: All voltages are with respect to GND.

Note 3: High temperatures degrade operating lifetimes. Operating lifetime is derated at temperatures greater than 105°C.

Note 4: Linearity and monotonicity are defined from code k_L to code 2^N–1, where N is the resolution and k_L is given by $k_L = 0.016 \bullet (2^N / V_{FS})$, rounded to the nearest whole code. For V_{FS} = 2.5V and N = 12, k_L = 26 and linearity is defined from code 26 to code 4,095. For V_{FS} = 4.096V and N = 12, k_L = 16 and linearity is defined from code 16 to code 4,095.

Note 5: Inferred from measurement at code 16 (LTC2637-12), code 4 (LTC2637-10) or code 1 (LTC2637-8), and at full-scale.

Note 6: This IC includes current limiting that is intended to protect the device during momentary overload conditions. Junction temperature can exceed the rated maximum during current limiting. Continuous operation above the specified maximum operating junction temperature may impair device reliability.

Note 7: Digital inputs at 0V or V_{CC}.

Note 8: Guaranteed by design and not production tested.

Note 9: Internal Reference mode. DAC is stepped 1/4 scale to 3/4 scale and 3/4 scale to 1/4 scale. Load is 2kΩ in parallel with 100pF to GND.

Note 10: Temperature coefficient is calculated by dividing the maximum change in output voltage by the specified temperature range.

Note 11: Maximum $V_{IH} = V_{CC(MAX)} + 0.5V$.

Note 12: C_B = Capacitance of one bus line in pF.

Note 13: All values refer to $V_{IH} = V_{IN(MIN)}$ and $V_{IL} = V_{IL(MAX)}$ levels.

Note 14: Minimum V_{IL} exceeds Absolute Maximum rating. This condition won't damage the IC, but could degrade performance.

Note 15: Thermal resistance of MSOP package limits I_{OUT} to $-5mA \le I_{OUT} \le 5mA$ for H-grade MSOP parts and V_{CC} = 5V ±10%.

TYPICAL PERFORMANCE CHARACTERISTICS

T_A = 25°C, unless otherwise noted. LTC2637-L12 (Internal Reference, V_{FS} = 2.5V)

Integral Nonlinearity (INL)

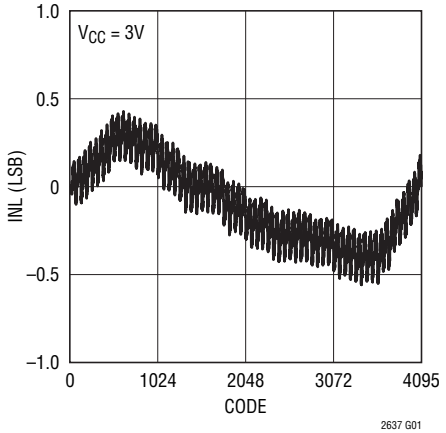

Differential Nonlinearity (DNL)

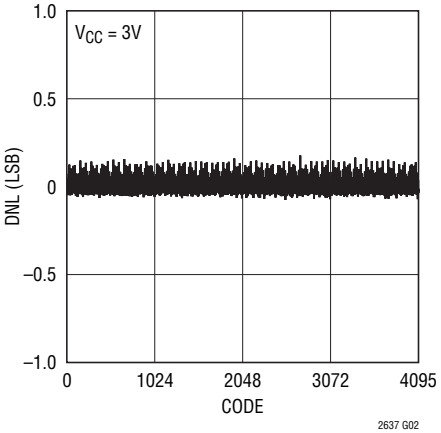

INL vs Temperature

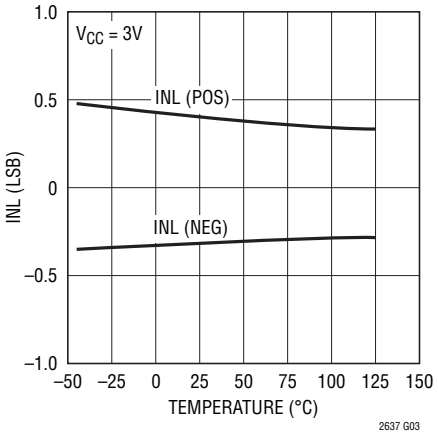

DNL vs Temperature

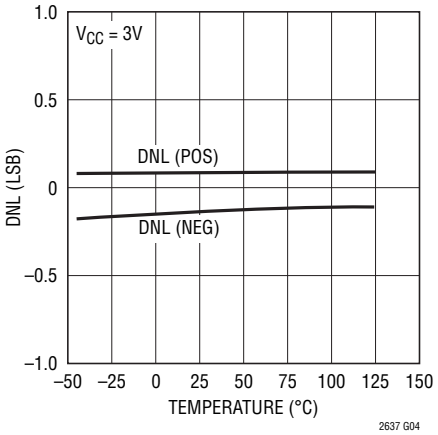

Reference Output Voltage vs Temperature

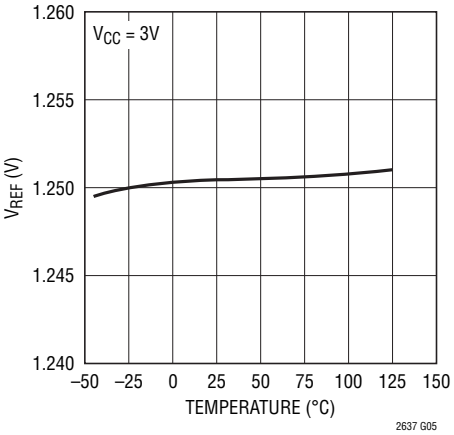

Settling to ±1LSB Rising

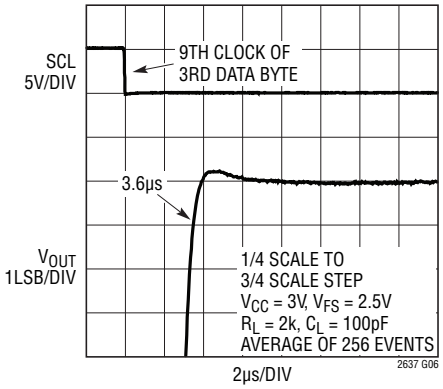

Settling to ±1LSB Falling

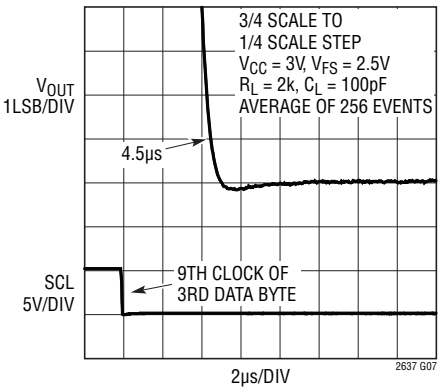

TYPICAL PERFORMANCE CHARACTERISTICS

T_A = 25°C, unless otherwise noted. LTC2637-H12 (Internal Reference, V_{FS} = 4.096V)

Integral Nonlinearity (INL)

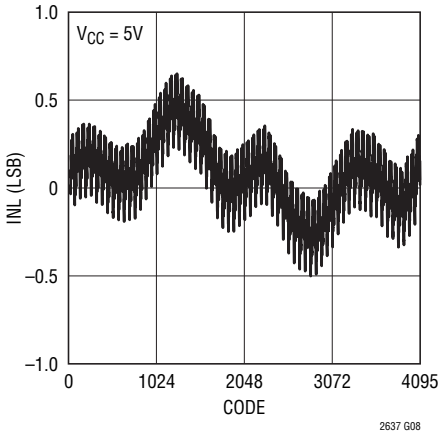

Differential Nonlinearity (DNL)

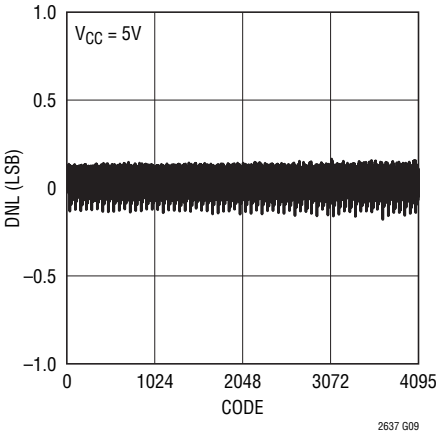

INL vs Temperature

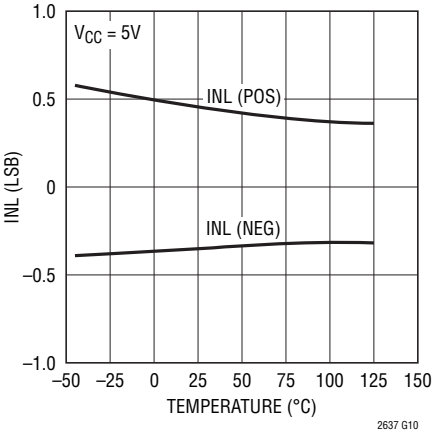

DNL vs Temperature

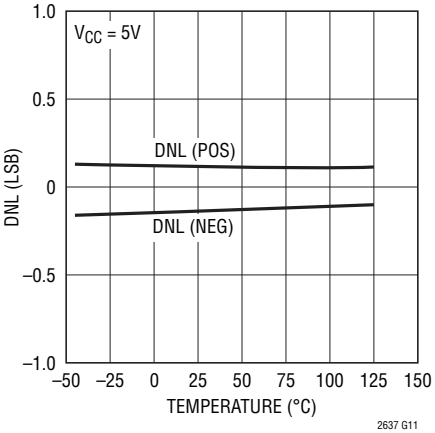

Reference Output Voltage vs Temperature

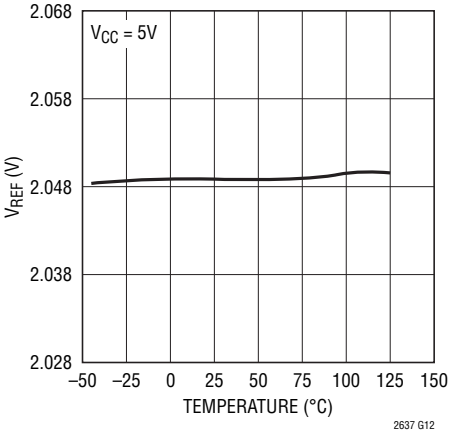

Settling to ±1LSB Rising

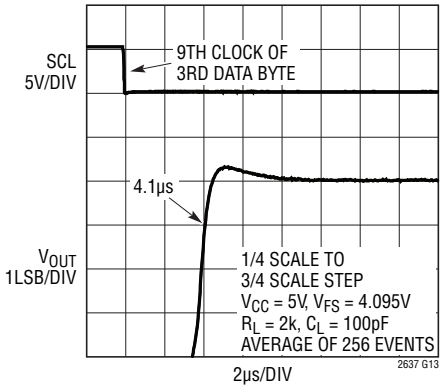

Settling to ±1LSB Falling

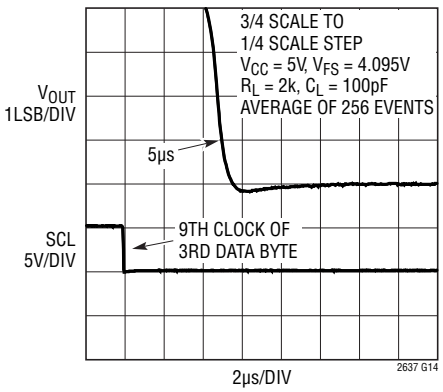

TYPICAL PERFORMANCE CHARACTERISTICS T_A = 25°C, unless otherwise noted.

LTC2637-10

Integral Nonlinearity (INL)

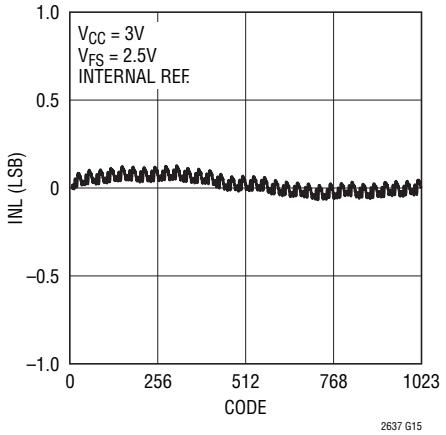

Differential Nonlinearity (DNL)

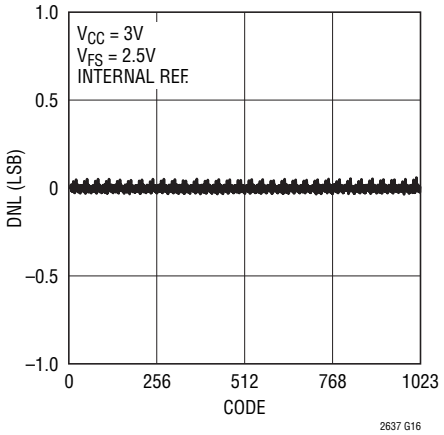

LTC2637-8

Integral Nonlinearity (INL)

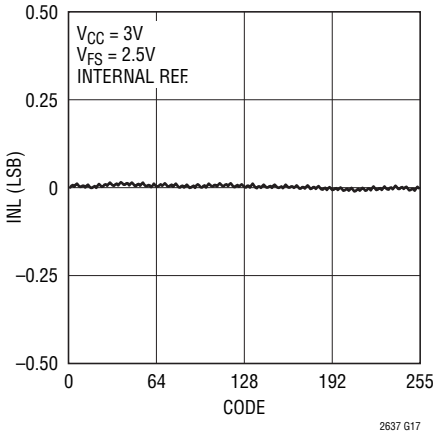

Differential Nonlinearity (DNL)

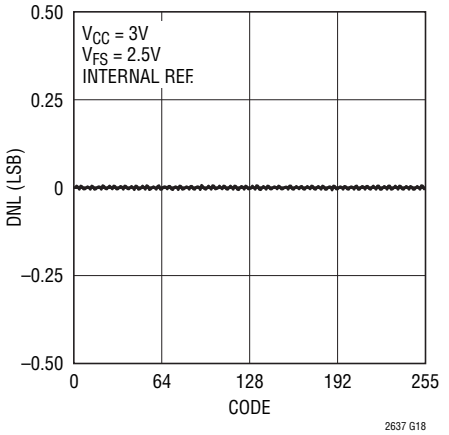

LTC2637

Load Regulation

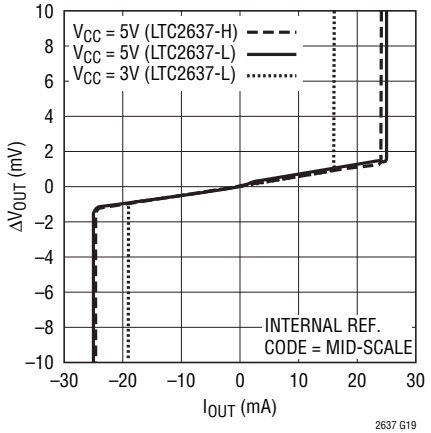

Current Limiting

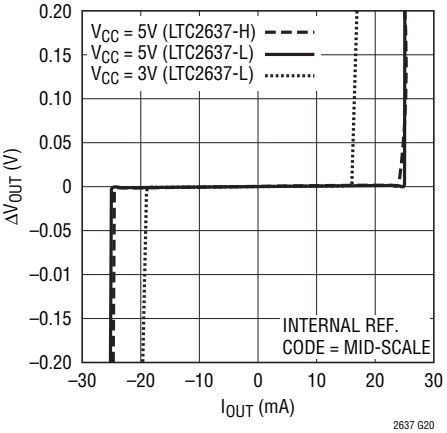

Offset Error vs Temperature

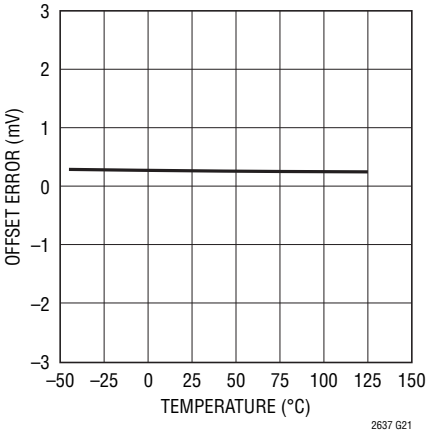

TYPICAL PERFORMANCE CHARACTERISTICS T_A = 25°C, unless otherwise noted.

LTC2637

Large-Signal Response

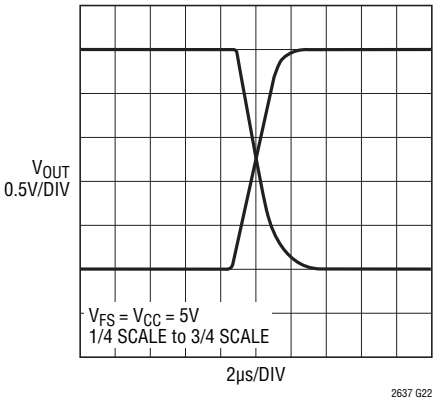

Mid-Scale Glitch Impulse

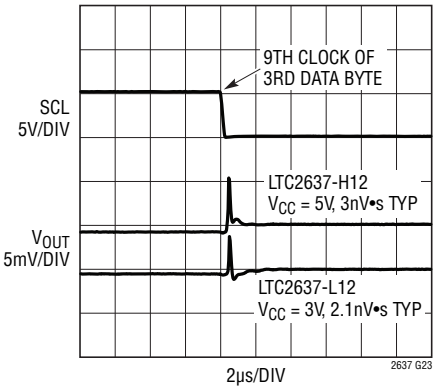

Power-On Reset Glitch

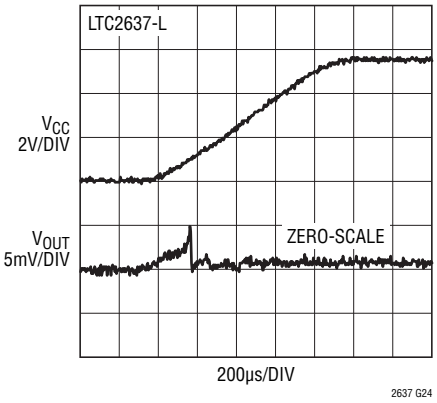

Headroom at Rails vs Output Current

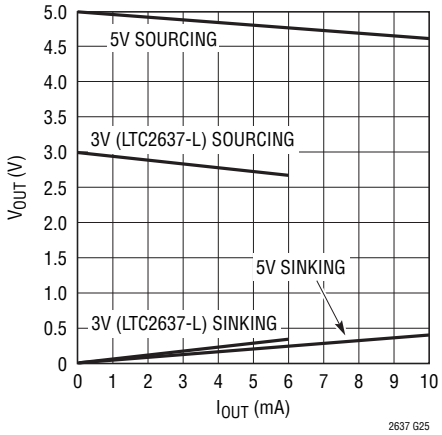

Exiting Power-Down to Mid-Scale

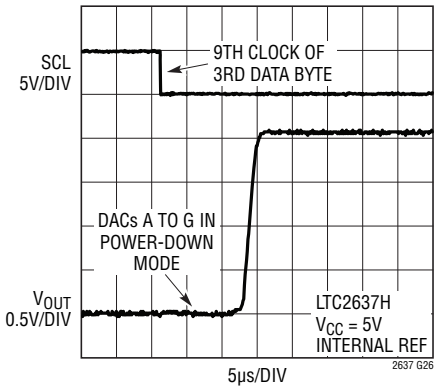

Power-On Reset to Mid-Scale

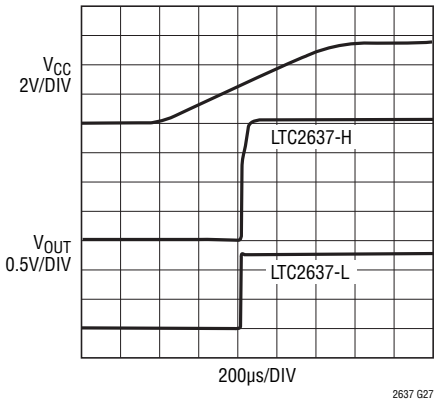

Supply Current vs Logic Voltage

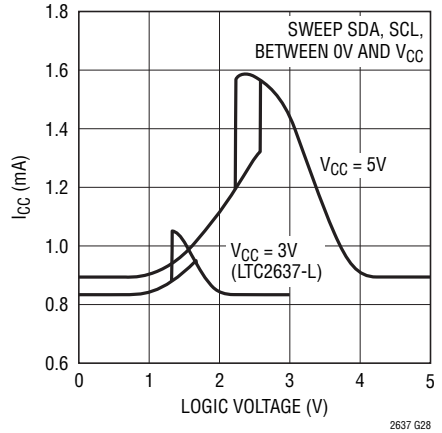

DAC to DAC Crosstalk (Dynamic)

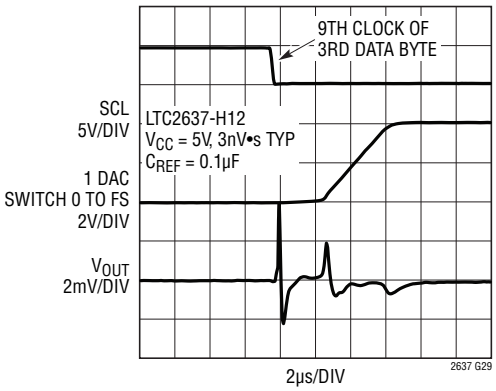

Multiplying Bandwidth

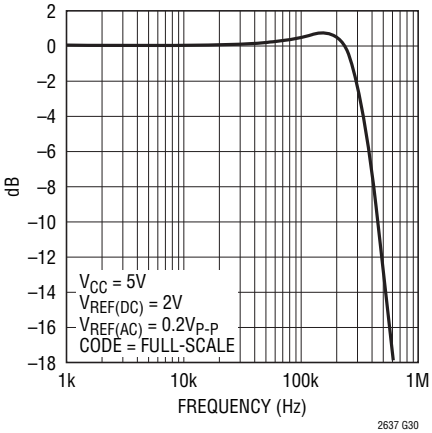

TYPICAL PERFORMANCE CHARACTERISTICS T_A = 25°C, unless otherwise noted.

LTC2637

Gain Error vs. Temperature

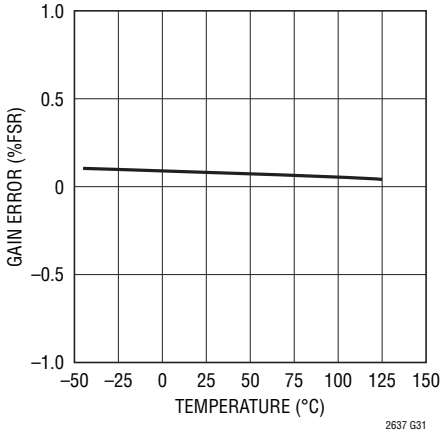

Noise Voltage vs. Frequency

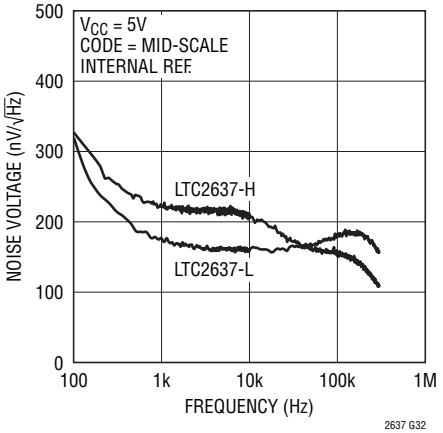

Gain Error vs Reference Input

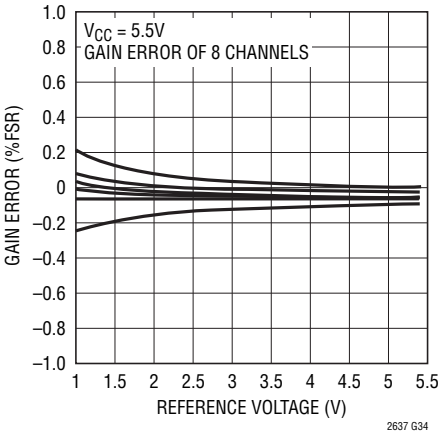

0.1Hz to 10Hz Voltage Noise

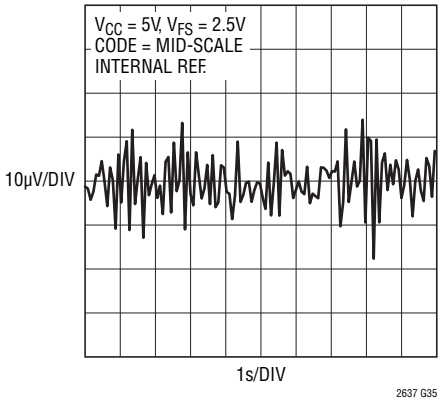

PIN FUNCTIONS (DFN/MSOP)

V_{CC} (Pin 1/Pin 1): Supply Voltage Input. 2.7V ≤ V_{CC} ≤ 5.5V (LTC2637-L) or 4.5V ≤ V_{CC} ≤ 5.5V (LTC2637-H). Bypass to GND with a 0.1µF capacitor.

V_{OUTA} to V_{OUTH} (Pins 2–5, 10–13/Pins 2–5, 12–15): DAC Analog Voltage Outputs.

CAO (Pin 6/Pin 7): Chip Address Bit 0. Tie this pin to V_{CC}, GND or leave it floating to select an I^2C slave address for the part (See Tables 1 and 2).

SCL (Pin 7/Pin 8): Serial Clock Input Pin. Data is shifted into the SDA pin at the rising edges of the clock. This high impedance pin requires a pull-up resistor or current source to V_{CC}.

SDA (Pin 8/Pin 9): Serial Data Bidirectional Pin. Data is shifted into the SDA pin and acknowledged by the SDA pin. This pin is high impedance while data is shifted in. Open drain N-channel output during acknowledgment. SDA requires a pull-up resistor or current source to V_{CC}.

REF (Pin 9/Pin 11): Reference Voltage Input or Output. When External Reference mode is selected, REF is an input (1V ≤ V_{REF} ≤ V_{CC}) where the voltage supplied sets the full-scale DAC output voltage. When Internal Reference is selected, the 10ppm/°C 1.25V (LTC2637-L) or 2.048V (LTC2637-H) internal reference (half full-scale) is available at the pin. This output may be bypassed to GND with up to 10µF, and must be buffered when driving external DC load current.

GND (Pin 14/Pin 16): Ground.

CA2 (Pin 6, MSOP only): Chip Address Bit 2. Tie this pin to V_{CC}, GND or leave it floating to select an I^2C slave address for the part (See Table 1).

CA1 (Pin 10, MSOP only): Chip Address Bit 1. Tie this pin to V_{CC}, GND or leave it floating to select an I^2C slave address for the part (See Table 1).

Exposed Pad (Pin 15, DFN Only): Ground. Must be soldered to PCB Ground.

BLOCK DIAGRAM

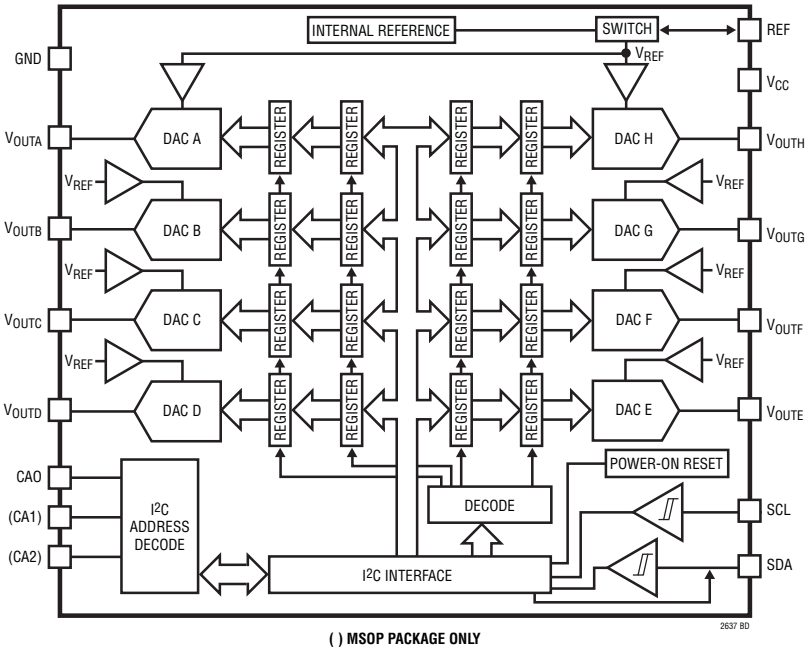

( ) MSOP PACKAGE ONLY

TEST CIRCUITS

Test Circuit 1

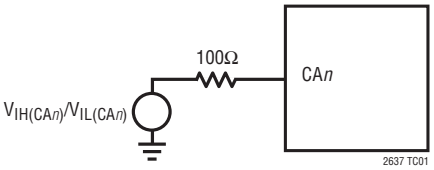

Test Circuit 2

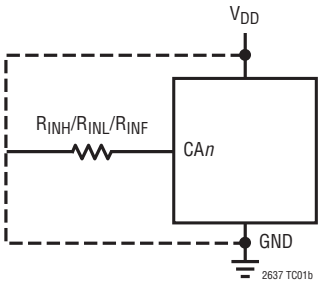

TIMING DIAGRAM

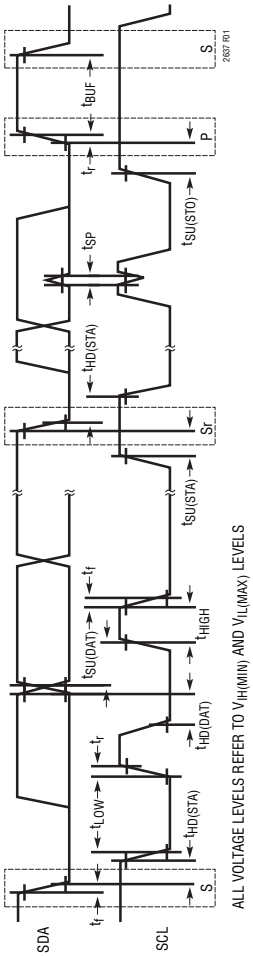

Figure 1. I²C Timing

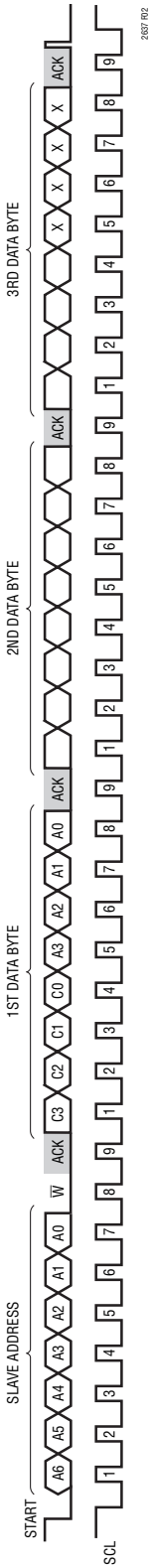

Figure 2. Typical LTC2637 Write Transaction

OPERATION

The LTC2637 is a family of octal voltage output DACs in 14-lead DFN and 16-lead MSOP packages. Each DAC can operate rail-to-rail using an external reference, or with its full-scale voltage set by an integrated reference. Eighteen combinations of accuracy (12-, 10-, and 8-bit), power-on reset value (zero-scale, mid-scale in internal reference mode, or mid-scale in external reference mode), and full-scale voltage (2.5V or 4.096V) are available. The LTC2637 is controlled using a 2-wire I^2C interface.

Power-On Reset

The LTC2637-HZ/LTC2637-LZ clear the output to zero-scale when power is first applied, making system initialization consistent and repeatable.

For some applications, downstream circuits are active during DAC power-up, and may be sensitive to nonzero outputs from the DAC during this time. The LTC2637 contains circuitry to reduce the power-on glitch: the analog output typically rises less than 5mV above zero-scale during power on. In general, the glitch amplitude decreases as the power supply ramp time is increased. See “Power-On Reset Glitch” in the Typical Performance Characteristics section.

The LTC2637-HMI/LTC2637-HMX/LTC2637-LMI/LTC2637-LMX provide an alternative reset, setting the output to mid-scale when power is first applied. The LTC2637-LMI and LTC2637-HMI power up in internal reference mode, with the output set to a mid-scale voltage of 1.25V and 2.048V, respectively. The LTC2637-LMX and LTC2637-HMX power-up in external reference mode, with the output set to mid-scale of the external reference. Default reference mode selection is described in the Reference Modes section.

Power Supply Sequencing

The voltage at REF (Pin 9, DFN; Pin 11, MSOP) must be kept within the range $-0.3V \le V_{REF} \le V_{CC} + 0.3V$ (see Absolute Maximum Ratings). Particular care should be taken to observe these limits during power supply turn-on and turn-off sequences, when the voltage at V_{CC} is in transition.

Transfer Function

The digital-to-analog transfer function is:

$$V_{OUT(IDEAL)} = \left(\frac{k}{2^N}\right)V_{REF}$$

where k is the decimal equivalent of the binary DAC input code, N is the resolution, and V_{REF} is either 2.5V (LTC2637-LMI/LTC2637-LMX/LTC2637-LZ) or 4.096V (LTC2637-HMI/LTC2637-HMX/LTC2637-HZ) when in Internal Reference mode, and the voltage at REF when in External Reference mode.

I^2C Serial Interface

The LTC2637 communicates with a host using the standard 2-wire I^2C interface. The timing diagrams (Figures 1 and 2) show the timing relationship of the signals on the bus. The two bus lines, SDA and SCL, must be high when the bus is not in use. External pull-up resistors or current sources are required on these lines. The value of these pull-up resistors is dependent on the power supply and can be obtained from the I^2C specifications. For an I^2C bus operating in the fast mode, an active pull-up will be necessary if the bus capacitance is greater than 200pF.

The LTC2637 is a receive-only (slave) device. The master can write to the LTC2637. The LTC2637 will not acknowledge (NAK) a read request from the master.

START (S) and STOP (P) Conditions

When the bus is not in use, both SCL and SDA must be high. A bus master signals the beginning of a communication to a slave device by transmitting a START condition. A START condition is generated by transitioning SDA from high to low while SCL is high.

When the master has finished communicating with the slave, it issues a STOP condition. A STOP condition is generated by transitioning SDA from low to high while SCL is high. The bus is then free for communication with another I^2C device.

OPERATION

Acknowledge

The Acknowledge (ACK) signal is used for handshaking between the master and the slave. An ACK (active LOW) generated by the slave lets the master know that the latest byte of information was properly received. The ACK related clock pulse is generated by the master. The master releases the SDA line (HIGH) during the ACK clock pulse. The slave-receiver must pull down the SDA bus line during the ACK clock pulse so that it remains a stable LOW during the HIGH period of this clock pulse. The LTC2637 responds to a write by a master in this manner but does not acknowledge a read operation; in that case, SDA is retained HIGH during the period of the ACK clock pulse.

Chip Address

The state of pins CA0, CA1 and CA2 (CA1 and CA2 are only available on the MSOP package) determines the slave address of the part. These pins can each be set to any one of three states: V_{CC}, GND or float. This results in 27 (MSOP Package) or 3 (DFN Package) selectable addresses for the part. The slave address assignments are shown in Tables 1 and 2.

In addition to the address selected by the address pins, the part also responds to a global address. This address allows a common write to all LTC2637 parts to be accomplished using one 3-byte write transaction on the I^2C bus. The global address, listed at the end of Tables 1 and 2, is a 7-bit hardwired address not selectable by CA0, CA1 or CA2. If another global address is required, please consult the factory.

The maximum capacitive load allowed on the address pins (CA0, CA1 and CA2) is 10pF, as these pins are driven during address detection to determine if they are floating.

Table 1. Slave Address Map (MSOP Package)

CA2	CA1	CA0	A6	A5	A4	A3	A2	A1	A0
GND	GND	GND	0	0	1	0	0	0	0
GND	GND	FLOAT	0	0	1	0	0	0	1
GND	GND	V_{CC}	0	0	1	0	0	1	0
GND	FLOAT	GND	0	0	1	0	0	1	1
GND	FLOAT	FLOAT	0	1	0	0	0	0	0
GND	FLOAT	V_{CC}	0	1	0	0	0	0	1
GND	V_{CC}	GND	0	1	0	0	0	1	0
GND	V_{CC}	FLOAT	0	1	0	0	0	1	1
GND	V_{CC}	V_{CC}	0	1	1	0	0	0	0
FLOAT	GND	GND	0	1	1	0	0	0	1
FLOAT	GND	FLOAT	0	1	1	0	0	1	0
FLOAT	GND	V_{CC}	0	1	1	0	0	1	1
FLOAT	FLOAT	GND	1	0	0	0	0	0	0
FLOAT	FLOAT	FLOAT	1	0	0	0	0	0	1
FLOAT	FLOAT	V_{CC}	1	0	0	0	0	1	0
FLOAT	V_{CC}	GND	1	0	0	0	0	1	1
FLOAT	V_{CC}	FLOAT	1	0	1	0	0	0	0
FLOAT	V_{CC}	V_{CC}	1	0	1	0	0	0	1
V_{CC}	GND	GND	1	0	1	0	0	1	0
V_{CC}	GND	FLOAT	1	0	1	0	0	1	1
V_{CC}	GND	V_{CC}	1	1	0	0	0	0	0
V_{CC}	FLOAT	GND	1	1	0	0	0	0	1
V_{CC}	FLOAT	FLOAT	1	1	0	0	0	1	0
V_{CC}	FLOAT	V_{CC}	1	1	0	0	0	1	1
V_{CC}	V_{CC}	GND	1	1	1	0	0	0	0
V_{CC}	V_{CC}	FLOAT	1	1	1	0	0	0	1
V_{CC}	V_{CC}	V_{CC}	1	1	1	0	0	1	0
GLOBAL ADDRESS			1	1	1	0	0	1	1

Table 2. Slave Address Map (DFN Package)

CA0	A6	A5	A4	A3	A2	A1	A0
GND	0	0	1	0	0	0	0
FLOAT	0	0	1	0	0	0	1
V_{CC}	0	0	1	0	0	1	0
GLOBAL ADDRESS	1	1	1	0	0	1	1

OPERATION

Write Word Protocol

The master initiates communication with the LTC2637 with a START condition and a 7-bit slave address followed by the Write bit ($\overline{W}$) = 0. The LTC2637 acknowledges by pulling the SDA pin low at the 9th clock if the 7-bit slave address matches the address of the part (set by CA0, CA1 or CA2) or the global address. The master then transmits three bytes of data. The LTC2637 acknowledges each byte of data by pulling the SDA line low at the 9th clock of each data byte transmission. After receiving three complete bytes of data, the LTC2637 executes the command specified in the 24-bit input word.

If more than three data bytes are transmitted after a valid 7-bit slave address, the LTC2637 does not acknowledge the extra bytes of data (SDA is high during the 9th clock).

The format of the three data bytes is shown in Figure 3. The first byte of the input word consists of the 4-bit command, followed by the 4-bit DAC address. The next two bytes contain the 16-bit data word, which consists of the 12-, 10- or 8-bit input code, MSB to LSB, followed by 4, 6 or 8 don't-care bits (LTC2637-12, LTC2637-10 and LTC2637-8, respectively). A typical LTC2637 write transaction is shown in Figure 4.

The command bit assignments (C3-C0) and address (A3-A0) assignments are shown in Tables 3 and 4. The first four commands in the table consist of write and update operations. A write operation loads a 16-bit data word from the 32-bit shift register into the input register. In an update operation, the data word is copied from the input register to the DAC register. Once copied into the DAC register, the data word becomes the active 12-, 10-, or 8-bit input code, and is converted to an analog voltage at the DAC output. Write to and Update combines the first two commands. The Update operation also powers up the DAC if it had been in power-down mode. The data path and registers are shown in the Block Diagram.

Table 3. Command Codes

COMMAND*				
C3	C2	C1	C0	
0	0	0	0	Write to Input Register n
0	0	0	1	Update (Power Up) DAC Register n
0	0	1	0	Write to Input Register n, Update (Power Up) All
0	0	1	1	Write to and Update (Power Up) DAC Register n
0	1	0	0	Power Down n
0	1	0	1	Power Down Chip (All DAC's and Reference)
0	1	1	0	Select Internal Reference (Power Up Reference)
0	1	1	1	Select External Reference (Power Down Internal Reference)
1	1	1	1	No Operation

*Command codes not shown are reserved and should not be used.

Table 4. Address Codes

ADDRESS (n)*				
A3	A2	A1	A0	
0	0	0	0	DAC A
0	0	0	1	DAC B
0	0	1	0	DAC C
0	0	1	1	DAC D
0	1	0	0	DAC E
0	1	0	1	DAC F
0	1	1	0	DAC G
0	1	1	1	DAC H
1	1	1	1	All DACs

*Address codes not shown are reserved and should not be used.

Reference Modes

For applications where an accurate external reference is either not available, or not desirable due to limited space, the LTC2637 has a user-selectable, integrated reference. The integrated reference voltage is internally amplified by 2x to provide the full-scale DAC output voltage range.

OPERATION

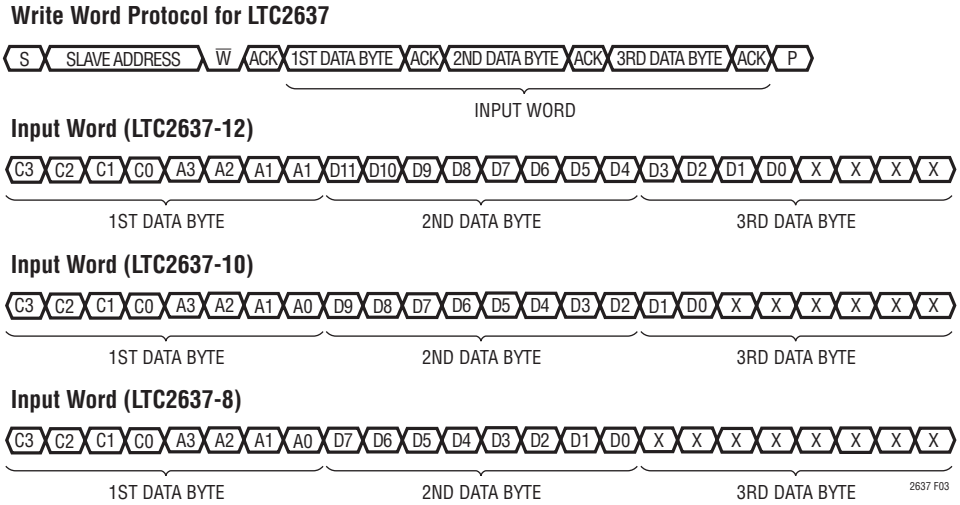

Figure 3. Command and Data Input Format

The LTC2637-LMI/ LTC2637-LMX/ LTC2637-LZ provides a full-scale output of 2.5V. The LTC2637-HMI/ LTC2637-HMX/ LTC2637-HZ provides a full-scale output of 4.096V. The internal reference can be useful in applications where the supply voltage is poorly regulated. Internal Reference mode can be selected by using command 0110b, and is the power-on default for LTC2637-HZ/ LTC2637-LZ, as well as for LTC2637-HMI/ LTC2637-LMI.

The 10ppm/°C, 1.25V (LTC2637-LMI/ LTC2637-LMX/ LTC2637-LZ) or 2.048V (LTC2637-HMI/ LTC2637-HMX/ LTC2637-HZ) internal reference is available at the REF pin. Adding bypass capacitance to the REF pin will improve noise performance; and up to 10µF can be driven without oscillation. The REF output must be buffered when driving an external DC load current.

Alternatively, the DAC can operate in External Reference mode using command 0111b. In this mode, an input voltage supplied externally to the REF pin provides the reference ($1V \leq V_{REF} \leq V_{CC}$) and the supply current is reduced. The external reference voltage supplied sets the full-scale DAC output voltage. External Reference mode is the power-on default for LTC2637-HMX/ LTC2637-LMX.

The reference mode of LTC2637-HZ/ LTC2637-LZ/ LTC2637-HMI/ LTC2637-LMI (internal reference power-on default), can be changed by software command after power up. The same is true for LTC2637-HMX/ LTC2637-LMX (external reference power-on default).

Power-Down Mode

For power-constrained applications, power-down mode can be used to reduce the supply current whenever less than eight DAC outputs are needed. When in power-down, the buffer amplifiers, bias circuits, and integrated reference circuits are disabled, and draw essentially zero current. The DAC outputs are put into a high-impedance state, and the output pins are passively pulled to ground through individual 200kΩ resistors. Input and DAC register contents are not disturbed during power down.

Any DAC channel or combination of channels can be put into power-down mode by using command 0100b in combination with the appropriate DAC address, (n). The supply current is reduced approximately 10% for each DAC powered down. The integrated reference is automatically powered down when external reference is selected using

OPERATION

command 0111b. In addition, all the DAC channels and the integrated reference together can be put into power-down mode using Power Down Chip command 0101b. When the integrated reference and all DAC channels are in power-down mode, the REF pin becomes high impedance (typically > 1GΩ). For all power-down commands the 16-bit data word is ignored.

Normal operation resumes after executing any command that includes a DAC update, (as shown in Table 1). The selected DAC is powered up as its voltage output is updated. When a DAC which is in a powered-down state is powered up and updated, normal settling is delayed. If less than eight DACs are in a powered-down state prior to the update command, the power-up delay time is 10µs. However, if all eight DACs and the integrated reference are powered down, then the main bias generation circuit block has been automatically shut down in addition to the DAC amplifiers and reference buffers. In this case, the power up delay time is 12µs. The power-up of the integrated reference depends on the command that powered it down. If the reference is powered down using the Select External Reference Command (0111b), then it can only be powered back up using Select Internal Reference Command (0110b). However, if the reference was powered down using Power Down Chip Command (0101b), then in addition to Select Internal Reference Command (0110b), any command that powers up the DACs will also power up the integrated reference.

Voltage Output

The LTC2637's DAC output integrated rail-to-rail amplifiers have guaranteed load regulation when sourcing or sinking up to 10mA at 5V, and 5mA at 3V.

Load regulation is a measure of the amplifier's ability to maintain the rated voltage accuracy over a wide range of load current. The measured change in output voltage per change in forced load current is expressed in LSB/mA.

DC output impedance is equivalent to load regulation, and may be derived from it by simply calculating a change in units from LSB/mA to ohms. The amplifier's DC output impedance is 0.1Ω when driving a load well away from the rails.

When drawing a load current from either rail, the output voltage headroom with respect to that rail is limited by the 50Ω typical channel resistance of the output devices (e.g., when sinking 1mA, the minimum output voltage is 50Ω • 1mA, or 50mV). See the graph "Headroom at Rails vs. Output Current" in the Typical Performance Characteristics section.

The amplifier is stable driving capacitive loads of up to 500pF.

Rail-to-Rail Output Considerations

In any rail-to-rail voltage output device, the output is limited to voltages within the supply range.

Since the analog output of the DAC cannot go below ground, it may limit for the lowest codes as shown in Figure 5b. Similarly, limiting can occur near full scale when the REF pin is tied to V_{CC}. If $V_{REF} = V_{CC}$ and the DAC full-scale error (FSE) is positive, the output for the highest codes limits at V_{CC}, as shown in Figure 5c. No full-scale limiting can occur if V_{REF} is less than V_{CC}–FSE.

Offset and linearity are defined and tested over the region of the DAC transfer function where no output limiting can occur.

Board Layout

The PC board should have separate areas for the analog and digital sections of the circuit. A single, solid ground plane should be used, with analog and digital signals carefully routed over separate areas of the plane. This keeps digital signals away from sensitive analog signals and minimizes the interaction between digital ground currents and the

OPERATION

analog section of the ground plane. The resistance from the LTC2637 GND pin to the ground plane should be as low as possible. Resistance here will add directly to the effective DC output impedance of the device (typically 0.1Ω). Note that the LTC2637 is no more susceptible to this effect than any other parts of this type; on the contrary, it allows layout-based performance improvements to shine rather than limiting attainable performance with excessive internal resistance.

Another technique for minimizing errors is to use a separate power ground return trace on another board layer. The trace should run between the point where the power supply is connected to the board and the DAC ground pin. Thus the DAC ground pin becomes the common point for analog ground, digital ground, and power ground. When the LTC2637 is sinking large currents, this current flows out the ground pin and directly to the power ground trace without affecting the analog ground plane voltage.

It is sometimes necessary to interrupt the ground plane to confine digital ground currents to the digital portion of the plane. When doing this, make the gap in the plane only as long as it needs to be to serve its purpose and ensure that no traces cross over the gap.

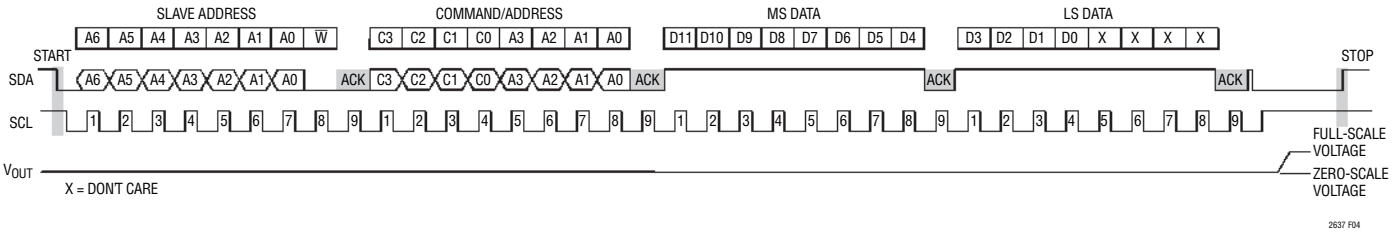

Figure 4. Typical LTC2637 Input Waveform—Programming DAC Output for Full-Scale

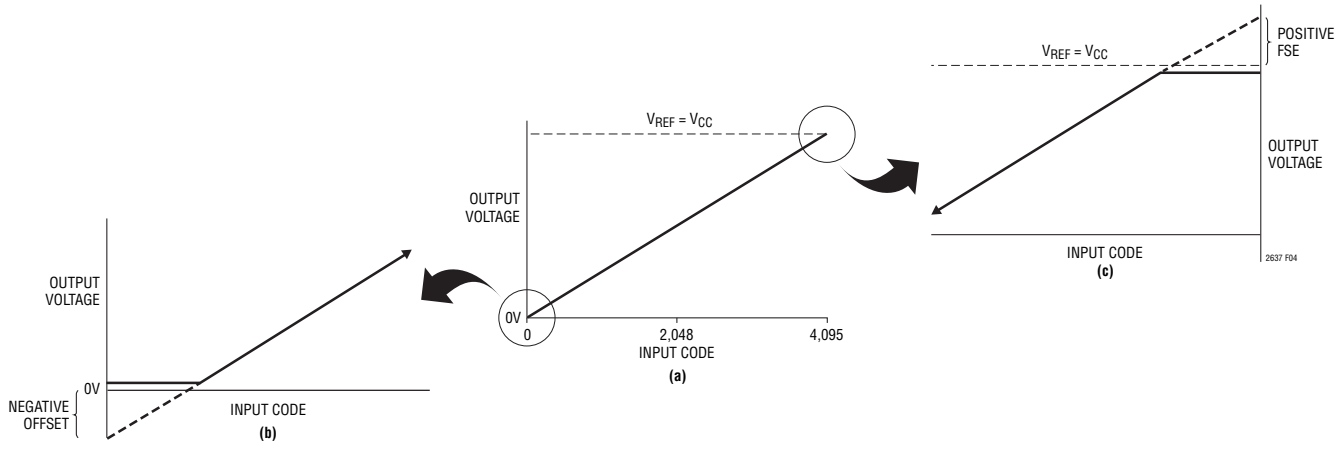

Figure 5. Effects of Rail-to-Rail Operation On a DAC Transfer Curve (Shown for 12 Bits).
(a) Overall Transfer Function
(b) Effect of Negative Offset for Codes Near Zero
(c) Effect of Positive Full-Scale Error for Codes Near Full-Scale

TYPICAL APPLICATION

LTC2637 DACs Adjust LTC2755-16 Offsets, Amplified with LT1991 PGA to ±5V

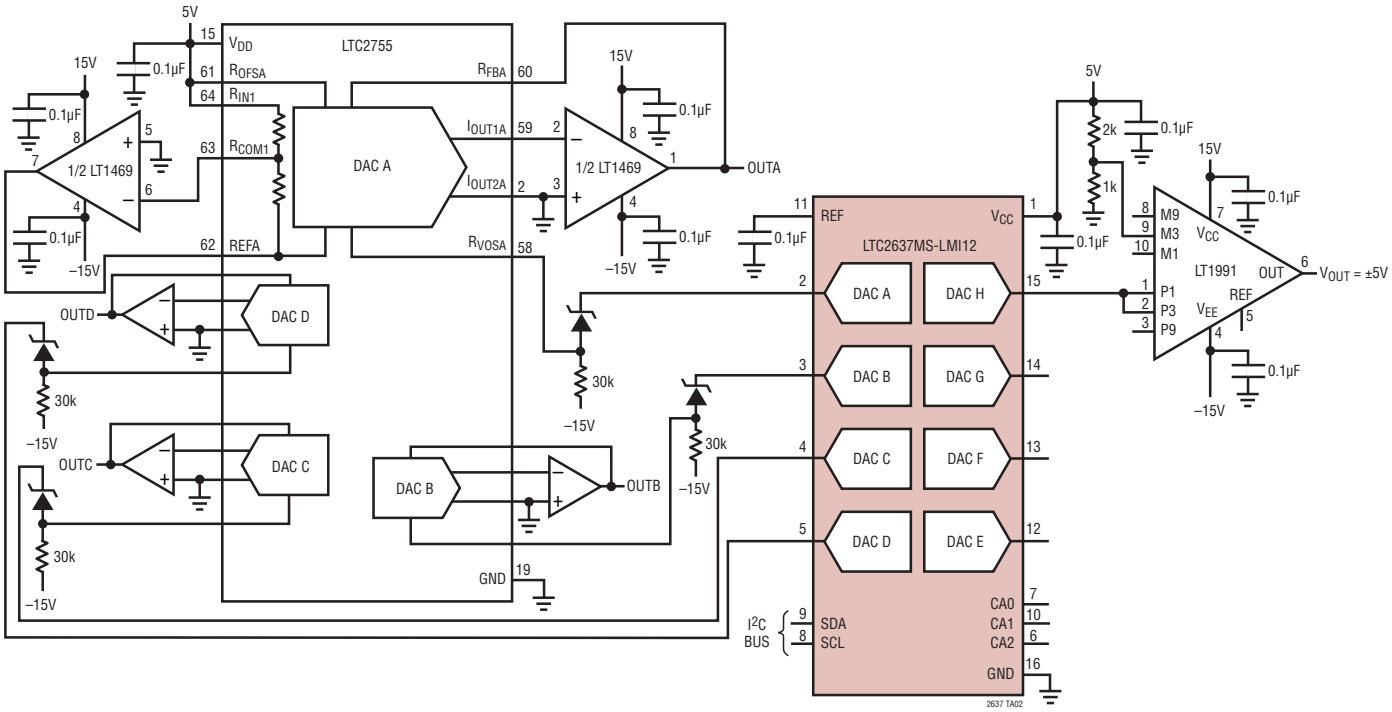

PACKAGE DESCRIPTION

DE Package
14-Lead (4mm × 3mm) Plastic DFN
(Reference LTC DWG # 05-08-1708 Rev B)

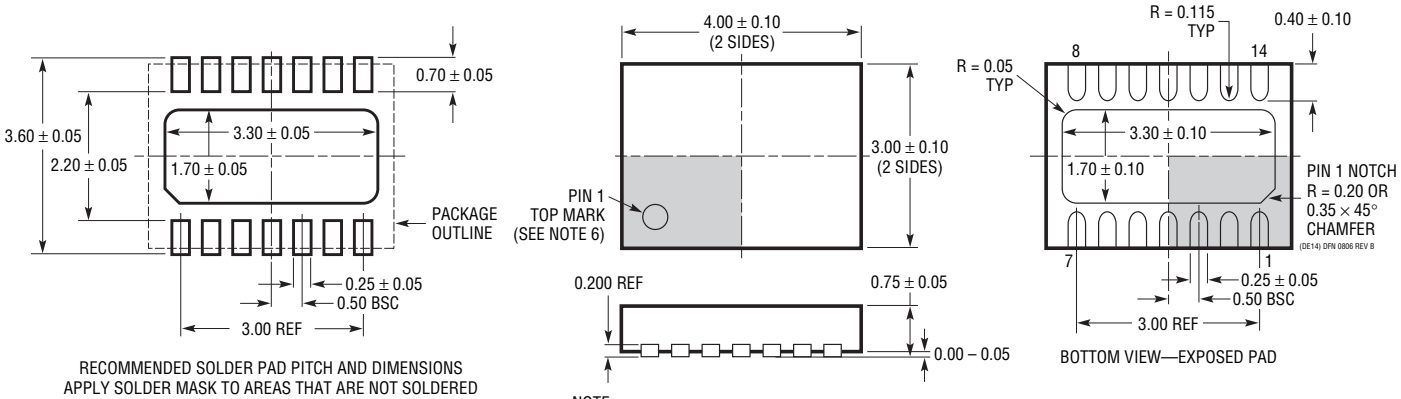

NOTE:
1. DRAWING PROPOSED TO BE MADE VARIATION OF VERSION (WGED-3) IN JEDEC PACKAGE OUTLINE MO-229
2. DRAWING NOT TO SCALE
3. ALL DIMENSIONS ARE IN MILLIMETERS
4. DIMENSIONS OF EXPOSED PAD ON BOTTOM OF PACKAGE DO NOT INCLUDE MOLD FLASH. MOLD FLASH, IF PRESENT, SHALL NOT EXCEED 0.15mm ON ANY SIDE
5. EXPOSED PAD SHALL BE SOLDER PLATED
6. SHADED AREA IS ONLY A REFERENCE FOR PIN 1 LOCATION ON THE TOP AND BOTTOM OF PACKAGE

MS Package
16-Lead (4mm × 5mm) Plastic MSOP
(Reference LTC DWG # 05-08-1669 Rev Ø)

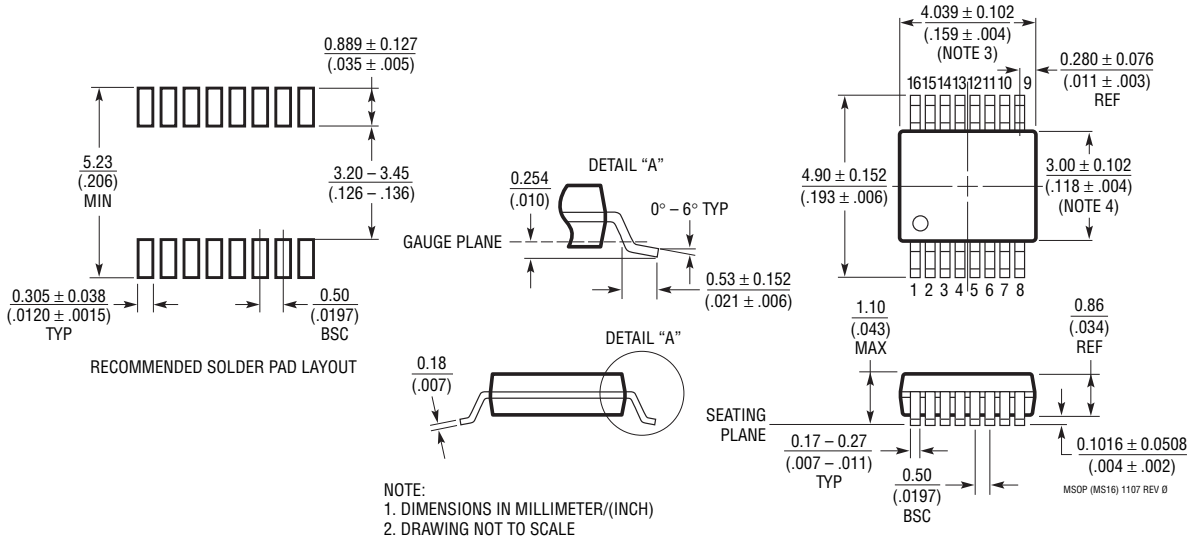

NOTE:
1. DIMENSIONS IN MILLIMETER/(INCH)
2. DRAWING NOT TO SCALE
3. DIMENSION DOES NOT INCLUDE MOLD FLASH, PROTRUSIONS OR GATE BURRS. MOLD FLASH, PROTRUSIONS OR GATE BURRS SHALL NOT EXCEED 0.152mm (.006") PER SIDE
4. DIMENSION DOES NOT INCLUDE INTERLEAD FLASH OR PROTRUSIONS. INTERLEAD FLASH OR PROTRUSIONS SHALL NOT EXCEED 0.152mm (.006") PER SIDE
5. LEAD COPLANARITY (BOTTOM OF LEADS AFTER FORMING) SHALL BE 0.102mm (.004") MAX

REVISION HISTORY

REV	DATE	DESCRIPTION	PAGE NUMBER
A	10/09	Update LTC2637-12 Maximum Limits	5, 6, 8

Information furnished by Linear Technology Corporation is believed to be accurate and reliable. However, no responsibility is assumed for its use. Linear Technology Corporation makes no representation that the interconnection of its circuits as described herein will not infringe on existing patent rights.

RELATED PARTS

PART NUMBER	DESCRIPTION	COMMENTS
LTC1660/LTC1665	Octal 10-/8-Bit V_{OUT} DACs in 16-Pin Narrow SSOP	V_{CC} = 2.7V to 5.5V, Micropower, Rail-to-Rail Output
LTC1663	Single 10-Bit V_{OUT} DAC in SOT-23	V_{CC} = 2.7V to 5.5V, 60µA, Internal reference, SMBus Interface
LTC1664	Quad 10-Bit V_{OUT} DAC in 16-Pin Narrow SSOP	V_{CC} = 2.7V to 5.5V, Micropower, Rail-to-Rail Output
LTC1669	Single 10-Bit V_{OUT} DAC in SOT-23	V_{CC} = 2.7V to 5.5V, 60µA, Internal reference, I^2C Interface
LTC1821	Parallel 16-Bit Voltage Output DAC	Precision 16-Bit Settling in 2µs for 10V Step
LTC2600/LTC2610/ LTC2620	Octal 16-/14-/12-Bit V_{OUT} DACs in 16-Lead Narrow SSOP	250µA per DAC, 2.5V to 5.5V Supply Range, Rail-to-Rail Output, SPI Serial Interface
LTC2601/LTC2611/ LTC2621	Single 16-/14-/12-Bit V_{OUT} DACs in 10-Lead DFN	300µA per DAC, 2.5V to 5.5V Supply Range, Rail-to-Rail Output, SPI Serial Interface
LTC2602/LTC2612/ LTC2622	Dual 16-/14-/12-Bit V_{OUT} DACs in 8-Lead MSOP	300µA per DAC, 2.5V to 5.5V Supply Range, Rail-to-Rail Output, SPI Serial Interface
LTC2604/LTC2614/ LTC2624	Quad 16-/14-/12-Bit V_{OUT} DACs in 16-Lead SSOP	250µA per DAC, 2.5V to 5.5V Supply Range, Rail-to-Rail Output, SPI Serial Interface
LTC2605/LTC2615/ LTC2625	Octal 16-/14-/12-Bit V_{OUT} DACs with I^2C Interface	250µA per DAC, 2.7V to 5.5V Supply Range, Rail-to-Rail Output, I^2C Interface
LTC2606/LTC2616/ LTC2626	Single 16-/14-/12-Bit V_{OUT} DACs with I^2C Interface	270µA per DAC, 2.7V to 5.5V Supply Range, Rail-to-Rail Output, I^2C Interface
LTC2609/LTC2619/ LTC2629	Quad 16-/14-/12-Bit V_{OUT} DACs with I^2C Interface	250µA per DAC, 2.7V to 5.5V Supply Range, Rail-to-Rail Output with Separate V_{REF} Pins for Each DAC
LTC2630	Single 12-/10-/8-Bit SPI V_{OUT} DACs with 10ppm/°C Reference in SC70	180µA per DAC, 2.7V to 5.5V Supply Range, 10ppm/°C Reference, Rail-to-Rail Output, SPI Interface
LTC2631	Single 12-/10-/8-Bit I^2C V_{OUT} DACs with 10ppm/°C Reference in ThinSOT™	180µA per DAC, 2.7V to 5.5V Supply Range, 10ppm/°C Reference, External Ref. Mode, Rail-to-Rail Output, I^2C Interface
LTC2634	Quad 12-/10-/8-Bit V_{OUT} DACs with 10ppm/°C Reference	125µA per DAC, 2.7V to 5.5V Supply Range, 10ppm/°C Reference, External Ref. Mode, Rail-to-Rail Output, SPI Interface
LTC2636	Octal 12-/10-/8-Bit V_{OUT} DACs with 10ppm/°C Reference	125µA per DAC, 2.7V to 5.5V Supply Range, 10ppm/°C Reference, External Ref. Mode, Rail-to-Rail Output, SPI Interface
LTC2640	Single 12-/10-/8-Bit SPI V_{OUT} DACs with 10ppm/°C Reference in ThinSOT	180µA per DAC, 2.7V to 5.5V Supply Range, 10ppm/°C Reference, External Ref. Mode, Rail-to-Rail Output, SPI Interface

ThinSOT is a trademark of Linear Technology Corporation

Linear Technology Corporation
1630 McCarthy Blvd., Milpitas, CA 95035-7417
(408) 432-1900 • FAX: (408) 434-0507 • www.linear.com
LT 1009 REV A • PRINTED IN USA
© LINEAR TECHNOLOGY CORPORATION 2009