Kingbright

2.0x1.25mm SMD CHIP LED LAMP

PRELIMINARY SPEC

Part Number: KPHCM-2012QBC-D Blue

ATTENTION
OBSERVE PRECAUTIONS
FOR HANDLING
ELECTROSTATIC
DISCHARGE
SENSITIVE
DEVICES

Features

- 2.0X1.25mm SMT LED,0.5mm MAX.THICKNESS.
- LOW POWER CONSUMPTION.
- WIDE VIEWING ANGLE.
- IDEAL FOR BACKLIGHT AND INDICATOR.
- VARIOUS COLORS AND LENS TYPES AVAILABLE.
- PACKAGE : 2000PCS / REEL.
- MOISTURE SENSITIVITY LEVEL : LEVEL 3.
- RoHS COMPLIANT.

Description

The Blue source color devices are made with AlInGaN on Sapphire Light Emitting Diode.
Static electricity and surge damage the LEDS.
It is recommended to use a wrist band or anti-electrostatic glove when handling the LEDs.
All devices, equipment and machinery must be electrically grounded.

Package Dimensions

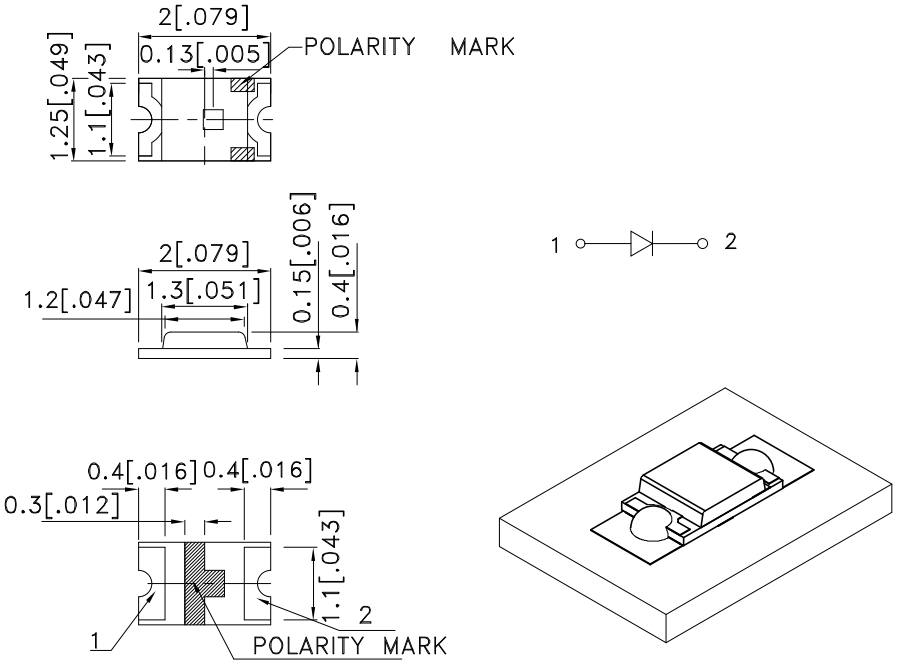

Notes:
1. All dimensions are in millimeters (inches).
2. Tolerance is ±0.1(0.004") unless otherwise noted.
3. Specifications are subject to change without notice.
4. The device has a single mounting surface. The device must be mounted according to the specifications.

Selection Guide

Part No.	Dice	Lens Type	Iv (mcd) [2] @ 20mA		Viewing Angle [1]
			Min.	Typ.	2θ1/2
KPHCM-2012QBC-D	Blue (AlInGaN)	WATER CLEAR	50	100	110°

Notes:
1. θ1/2 is the angle from optical centerline where the luminous intensity is 1/2 the optical centerline value.
2. Luminous intensity/ luminous Flux: +/-15%.

Electrical / Optical Characteristics at TA=25°C

Symbol	Parameter	Device	Typ.	Max.	Units	Test Conditions
λpeak	Peak Wavelength	Blue	468		nm	I_F=20mA
λD [1]	Dominant Wavelength	Blue	470		nm	I_F=20mA
Δλ1/2	Spectral Line Half-width	Blue	25		nm	I_F=20mA
C	Capacitance	Blue	100		pF	V_F=0V;f=1MHz
V_F [2]	Forward Voltage	Blue	3.3	4	V	I_F=20mA
I_R	Reverse Current	Blue		10	uA	V_R=5V

Notes:
1.Wavelength: +/-1nm.
2. Forward Voltage: +/-0.1V.

Absolute Maximum Ratings at TA=25°C

Parameter	Blue	Units
Power dissipation	120	mW
DC Forward Current	30	mA
Peak Forward Current [1]	150	mA
Reverse Voltage	5	V
Operating Temperature	-40°C To +85°C	
Storage Temperature	-40°C To +85°C	

Note:
1. 1/10 Duty Cycle, 0.1ms Pulse Width.

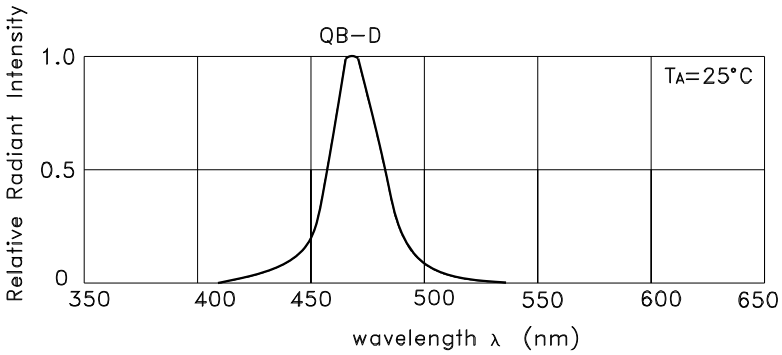

RELATIVE INTENSITY Vs. WAVELENGTH

Blue **KPHCM-2012QBC-D**

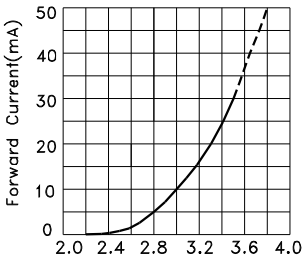

FORWARD CURRENT Vs. FORWARD VOLTAGE

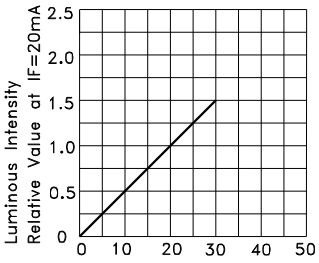

LUMINOUS INTENSITY Vs. FORWARD CURRENT

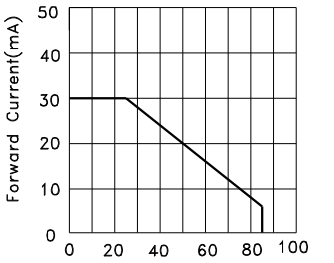

FORWARD CURRENT DERATING CURVE

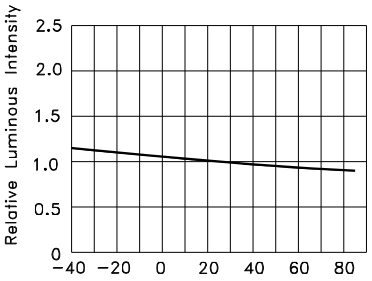

LUMINOUS INTENSITY Vs. AMBIENT TEMPERATURE

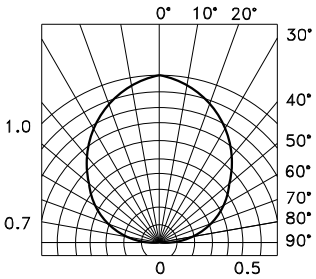

SPATIAL DISTRIBUTION

KPHCM-2012QBC-D

Reflow Soldering Profile For Lead-free SMT Process.

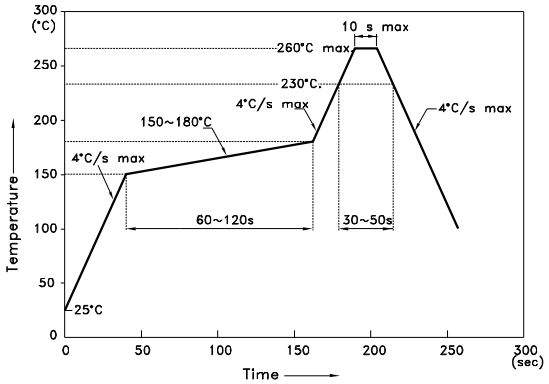

NOTES:
1. We recommend the reflow temperature 245°C(+/−5°C).The maximum soldering temperature should be limited to 260°C.
2. Don't cause stress to the epoxy resin while it is exposed to high temperature.
3. Number of reflow process shall be 2 times or less.

Recommended Soldering Pattern
(Units : mm; Tolerance: ± 0.1)

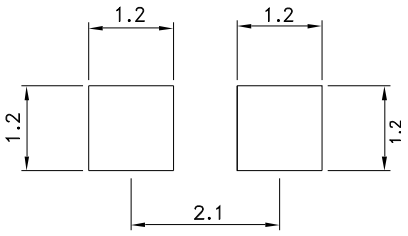
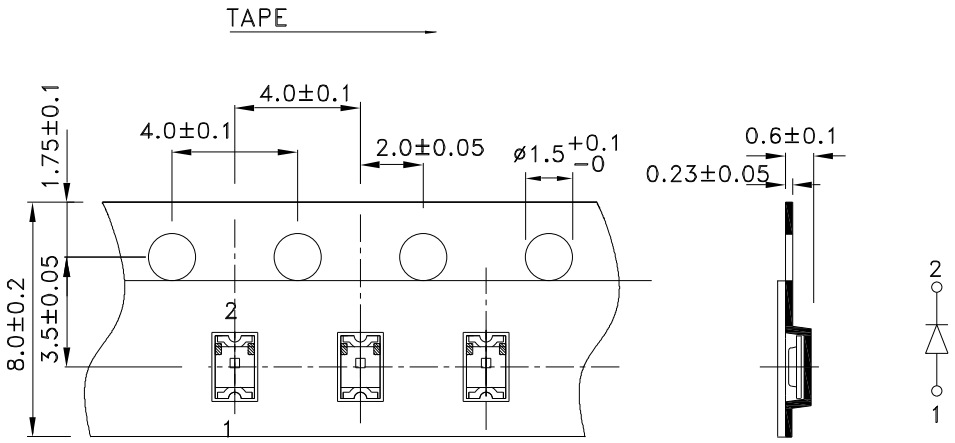
Tape Specifications
(Units : mm)