# Dual Unbuffered Inverter

# NL27WZU04

The NL27WZU04 is a high performance dual unbuffered inverter operating from a 1.65 to 5.5 V supply.

### Features

- Designed for 1.65 V to 5.5 V $V_{CC}$ Operation
- Input Overvoltage Tolerant up to 5.5 V
- $I_{OFF}$ Supports Partial Power Down Protection
- Source/Sink 24 mA at 3.0 V
- Available in SC−88, SC−74 and UDFN6 Packages
- Chip Complexity < 100 FETs
- −Q Suffix for Automotive and Other Applications Requiring Unique Site and Control Change Requirements; AEC−Q100 Qualified and PPAP Capable
- These Devices are Pb−Free, Halogen Free/BFR Free and are RoHS Compliant

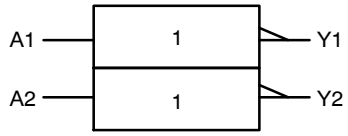


**Figure 1. Logic Symbol**

**MARKING DIAGRAMS**

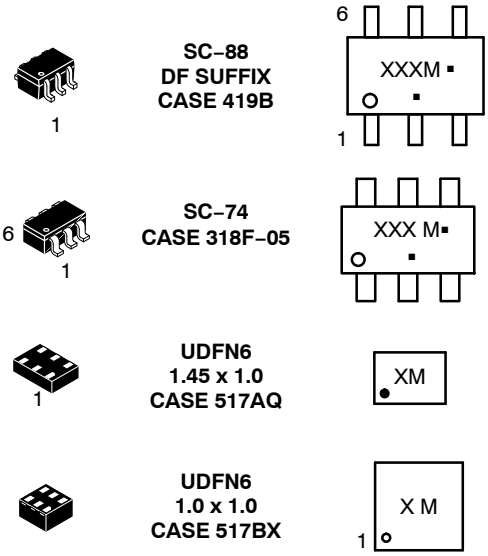


X, XXX = Specific Device Code
M = Date Code*
▪ = Pb−Free Package

(Note: Microdot may be in either location)

*Date Code orientation and/or position may vary depending upon manufacturing location.

### ORDERING INFORMATION

See detailed ordering, marking and shipping information in the package dimensions section on page 7 of this data sheet.

© Semiconductor Components Industries, LLC, 2015

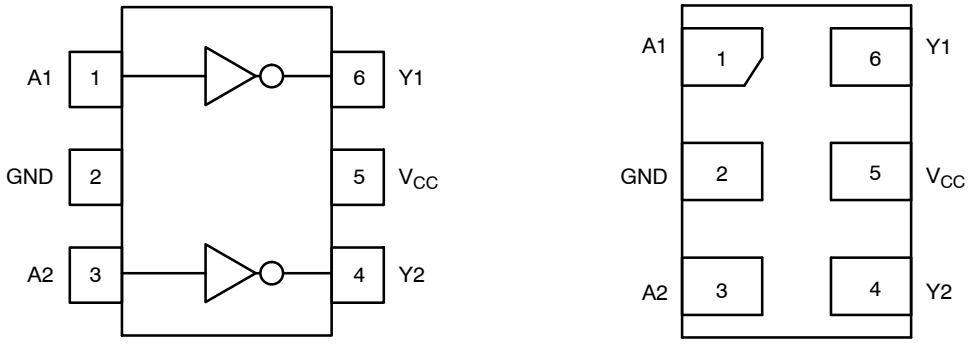


(SC−88 / SC−74) UDFN6

**Figure 2. Pinout** (Top View)

**PIN ASSIGNMENT**

| Pin | Function |
|---|---|
| 1 | A1 |
| 2 | GND |
| 3 | A2 |
| 4 | Y2 |
| 5 | $V_{CC}$ |
| 6 | Y1 |

**FUNCTION TABLE**

| A Input | Y Output |
|---|---|
| L | H |
| H | L |

## MAXIMUM RATINGS

| Symbol | Characteristics | | Value | Unit |
|---|---|---|---|---|
| $V_{CC}$ | DC Supply Voltage | | −0.5 to +6.5 | V |
| $V_{IN}$ | DC Input Voltage | | −0.5 to +6.5 | V |
| $V_{OUT}$ | DC Output Voltage | | −0.5 to $V_{CC}$ + 0.5 | V |
| $I_{IK}$ | DC Input Diode Current | $V_{IN}$ < GND | −50 | mA |
| $I_{OK}$ | DC Output Diode Current | | ±50 | mA |
| $I_{OUT}$ | DC Output Source/Sink Current | | ±50 | mA |
| $I_{CC}$ or $I_{GND}$ | DC Supply Current per Supply Pin or Ground Pin | | ±100 | mA |
| $T_{STG}$ | Storage Temperature Range | | −65 to +150 | °C |
| $T_L$ | Lead Temperature, 1 mm from Case for 10 secs | | 260 | °C |
| $T_J$ | Junction Temperature Under Bias | | +150 | °C |
| $\theta_{JA}$ | Thermal Resistance (Note 2) | SC−88<br>SC−74<br>UDFN6 | 377<br>320<br>154 | °C/W |
| $P_D$ | Power Dissipation in Still Air | SC−88<br>SC−74<br>UDFN6 | 332<br>300<br>812 | mW |
| MSL | Moisture Sensitivity | | Level 1 | – |
| $F_R$ | Flammability Rating | Oxygen Index: 28 to 34 | UL 94 V−0 @ 0.125 in | – |
| $V_{ESD}$ | ESD Withstand Voltage (Note 3) | Human Body Model<br>Charged Device Model | 2000<br>1000 | V |
| $I_{Latchup}$ | Latchup Performance (Note 4) | | ±100 | mA |

Stresses exceeding those listed in the Maximum Ratings table may damage the device. If any of these limits are exceeded, device functionality should not be assumed, damage may occur and reliability may be affected.

1. Applicable to devices with outputs that may be tri−stated.
2. Measured with minimum pad spacing on an FR4 board, using 10mm−by−1inch, 2 ounce copper trace no air flow per JESD51−7.
3. HBM tested to ANSI/ESDA/JEDEC JS−001−2017. CDM tested to EIA/JESD22−C101−F. JEDEC recommends that ESD qualification to EIA/JESD22−A115−A (Machine Model) be discontinued per JEDEC/JEP172A.
4. Tested to EIA/JESD78 Class II.

## RECOMMENDED OPERATING CONDITIONS

| Symbol | Characteristics | | Min | Max | Unit |
|---|---|---|---|---|---|
| $V_{CC}$ | Positive DC Supply Voltage | | 1.65 | 5.5 | V |
| $V_{IN}$ | DC Input Voltage | | 0 | 5.5 | V |
| $V_{OUT}$ | DC Output Voltage | | 0 | $V_{CC}$ | |
| $T_A$ | Operating Temperature Range | | −55 | +125 | °C |
| $t_r$ , $t_f$ | Input Rise and Fall Time | $V_{CC}$ = 1.65 V to 1.95 V<br>$V_{CC}$ = 2.3 V to 2.7 V<br>$V_{CC}$ = 3.0 V to 3.6 V<br>$V_{CC}$ = 4.5 V to 5.5 V | 0<br>0<br>0<br>0 | 20<br>20<br>10<br>5 | ns/V |

Functional operation above the stresses listed in the Recommended Operating Ranges is not implied. Extended exposure to stresses beyond the Recommended Operating Ranges limits may affect device reliability.

## DC ELECTRICAL CHARACTERISTICS

| Symbol | Parameter | Condition | $V_{CC}$ (V) | $T_A$ = 25°C | | | −55°C ≤ $T_A$ ≤ 125°C | | Units |
|---|---|---|---|---|---|---|---|---|---|
| | | | | Min | Typ | Max | Min | Max | |
| $V_{IH}$ | High−Level Input Voltage | | 1.65 to 1.95 | 0.85 $V_{CC}$ | – | – | 0.85 $V_{CC}$ | – | V |
| | | | 2.3 to 5.5 | 0.80 $V_{CC}$ | – | – | 0.80 $V_{CC}$ | – | |
| $V_{IL}$ | Low−Level Input Voltage | | 1.65 to 1.95 | – | – | 0.15 $V_{CC}$ | – | 0.15 $V_{CC}$ | V |
| | | | 2.3 to 5.5 | – | – | 0.20 $V_{CC}$ | – | 0.20 $V_{CC}$ | |
| $V_{OH}$ | High−Level Output Voltage | $V_{IN}$ = GND | | | | | | | V |
| | | $I_{OH}$ = −100 μA | 1.65 to 5.5 | $V_{CC}$ − 0.1 | $V_{CC}$ | – | $V_{CC}$ − 0.1 | – | |
| | | $I_{OH}$ = −4 mA | 1.65 | 1.29 | 1.4 | – | 1.29 | – | |
| | | $I_{OH}$ = −8 mA | 2.3 | 1.9 | 2.1 | – | 1.9 | – | |
| | | $I_{OH}$ = −12 mA | 2.7 | 2.2 | 2.4 | – | 2.2 | – | |
| | | $I_{OH}$ = −16 mA | 3.0 | 2.4 | 2.7 | – | 2.4 | – | |
| | | $I_{OH}$ = −24 mA | 3.0 | 2.3 | 2.5 | – | 2.3 | – | |
| | | $I_{OH}$ = −32 mA | 4.5 | 3.8 | 4.0 | – | 3.8 | – | |
| $V_{OL}$ | Low−Level Output Voltage | $V_{IN}$ = $V_{CC}$ | | | | | | | V |
| | | $I_{OL}$ = 100 μA | 1.65 to 5.5 | – | – | 0.1 | – | 0.1 | |
| | | $I_{OL}$ = 4 mA | 1.65 | – | 0.08 | 0.24 | – | 0.24 | |
| | | $I_{OL}$ = 8 mA | 2.3 | – | 0.2 | 0.3 | – | 0.3 | |
| | | $I_{OL}$ = 12 mA | 2.7 | – | 0.22 | 0.4 | – | 0.4 | |
| | | $I_{OL}$ = 16 mA | 3.0 | – | 0.28 | 0.4 | – | 0.4 | |
| | | $I_{OL}$ = 24 mA | 3.0 | – | 0.38 | 0.55 | – | 0.55 | |
| | | $I_{OL}$ = 32 mA | 4.5 | – | 0.42 | 0.55 | – | 0.55 | |
| $I_{IN}$ | Input Leakage Current | $V_{IN}$ = 5.5 V or GND | 1.65 to 5.5 | – | – | ±0.1 | – | ±1.0 | μA |
| $I_{OFF}$ | Power Off Leakage Current | $V_{IN}$ = 5.5 V | 0 | – | – | 1.0 | – | 10 | μA |
| $I_{CC}$ | Quiescent Supply Current | $V_{IN}$ = $V_{CC}$ or GND | 5.5 | – | – | 1.0 | – | 10 | μA |

Product parametric performance is indicated in the Electrical Characteristics for the listed test conditions, unless otherwise noted. Product performance may not be indicated by the Electrical Characteristics if operated under different conditions.

## AC ELECTRICAL CHARACTERISTICS

| Symbol | Parameter | Condition | $V_{CC}$ (V) | $T_A$ = 25°C | | | −55°C ≤ $T_A$ ≤ 125°C | | Units |
|---|---|---|---|---|---|---|---|---|---|
| | | | | Min | Typ | Max | Min | Max | |
| $t_{PLH}$ $t_{PHL}$ | Propagation Delay Input A to Y (Figure 3 and 4) | $R_L$ = 1 MΩ, $C_L$ = 15 pF | 1.65 to 1.95 | – | 5.5 | 9.8 | – | 11.0 | ns |
| | | $R_L$ = 1 MΩ, $C_L$ = 15 pF | 2.3 to 2.7 | – | 3.3 | 5.7 | – | 6.3 | |
| | | $R_L$ = 1 MΩ, $C_L$ = 15 pF | 3.0 to 3.6 | – | 2.7 | 4.1 | – | 4.5 | |
| | | $R_L$ = 500 Ω, $C_L$ = 50 pF | | – | 4.0 | 6.4 | – | 7.0 | |
| | | $R_L$ = 1 MΩ, $C_L$ = 15 pF | 4.5 to 5.5 | – | 2.2 | 3.3 | – | 3.6 | |
| | | $R_L$ = 500 Ω, $C_L$ = 50 pF | | – | 3.4 | 5.6 | – | 6.2 | |

## CAPACITIVE CHARACTERISTICS

| Symbol | Parameter | Condition | Typical | Units |
|---|---|---|---|---|
| $C_{IN}$ | Input Capacitance | $V_{CC}$ = 5.5 V, $V_{IN}$ = 0 V or $V_{CC}$ | 2.5 | pF |
| $C_{OUT}$ | Output Capacitance | $V_{CC}$ = 5.5 V, $V_{IN}$ = 0 V or $V_{CC}$ | 4.0 | pF |
| $C_{PD}$ | Power Dissipation Capacitance (Note 5) | 10 MHz, $V_{CC}$ = 5.5 V, $V_{IN}$ = 0 V or $V_{CC}$ | 4.0 | pF |

5. $C_{PD}$ is defined as the value of the internal equivalent capacitance which is calculated from the operating current consumption without load. Average operating current can be obtained by the equation: $I_{CC(OPR)} = C_{PD} \bullet V_{CC} \bullet f_{in} + I_{CC}$. $C_{PD}$ is used to determine the no−load dynamic power consumption; $P_D = C_{PD} \bullet V_{CC}^2 \bullet f_{in} + I_{CC} \bullet V_{CC}$.

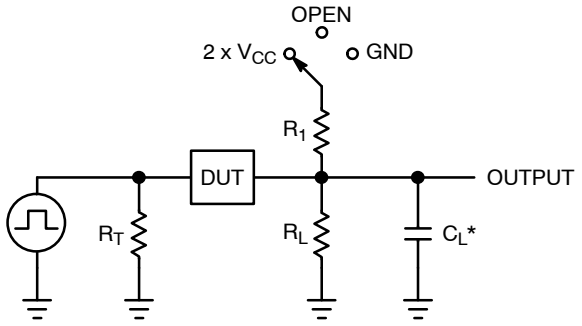


$C_L$ includes probe and jig capacitance
$R_T$ is $Z_{OUT}$ of pulse generator (typically 50 Ω)
f = 1 MHz

**Figure 3. Test Circuit**

| Test | Switch Position | $C_L$, pF | $R_L$, Ω | $R_1$, Ω |
|---|---|---|---|---|
| $t_{PLH}$ / $t_{PHL}$ | Open | See AC Characteristics Table | | |
| $t_{PLZ}$ / $t_{PZL}$ | 2 x $V_{CC}$ | 50 | 500 | 500 |
| $t_{PHZ}$ / $t_{PZH}$ | GND | 50 | 500 | 500 |

X = Don't Care

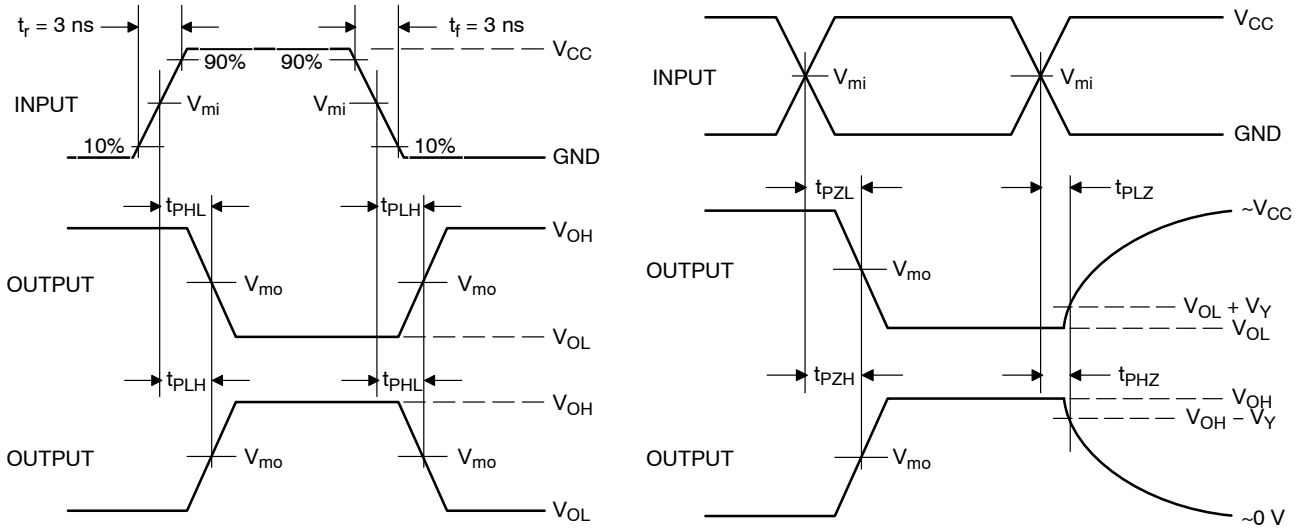


**Figure 4. Switching Waveforms**

| $V_{CC}$, V | $V_{mi}$, V | $V_{mo}$, V | | $V_Y$, V |
|---|---|---|---|---|
| | | $t_{PLH}$, $t_{PHL}$ | $t_{PZL}$, $t_{PLZ}$, $t_{PZH}$, $t_{PHZ}$ | |
| 1.65 to 1.95 | $V_{CC}/2$ | $V_{CC}/2$ | $V_{CC}/2$ | 0.15 |
| 2.3 to 2.7 | $V_{CC}/2$ | $V_{CC}/2$ | $V_{CC}/2$ | 0.15 |
| 3.0 to 3.6 | $V_{CC}/2$ | $V_{CC}/2$ | $V_{CC}/2$ | 0.3 |
| 4.5 to 5.5 | $V_{CC}/2$ | $V_{CC}/2$ | $V_{CC}/2$ | 0.3 |

## DEVICE ORDERING INFORMATION

| Device | Packages | Specific Device Code | Pin 1 Orientation (See below) | Shipping† |
|---|---|---|---|---|
| NL27WZU04DFT2G | SC−88 | M6 | Q4 | 3000 / Tape & Reel |
| NL27WZU04DFT2G−Q* | SC−88 | M6 | Q4 | 3000 / Tape & Reel |
| NL27WZU04DBVT1G | SC−74 | M6 | Q4 | 3000 / Tape & Reel |
| NL27WZU04MU1TCG (In Development) | UDFN6, 1.45 x 1.0, 0.5P | TBD | Q4 | 3000 / Tape & Reel |
| NL27WZU04MU3TCG (In Development) | UDFN6, 1.0 x 1.0, 0.35P | TBD | Q4 | 3000 / Tape & Reel |

†For information on tape and reel specifications, including part orientation and tape sizes, please refer to our Tape and Reel Packaging Specifications Brochure, BRD8011/D.

*−Q Suffix for Automotive and Other Applications Requiring Unique Site and Control Change Requirements; AEC−Q100 Qualified and PPAP Capable.

### Pin 1 Orientation in Tape and Reel

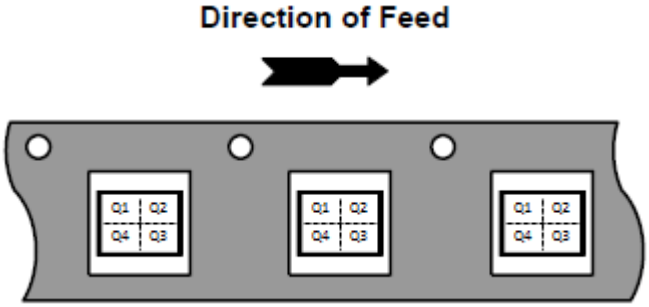

## PACKAGE DIMENSIONS

**UDFN6, 1.45x1.0, 0.5P**
CASE 517AQ
ISSUE O

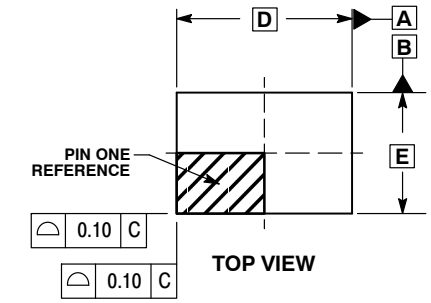


TOP VIEW

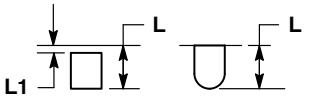


DETAIL A
OPTIONAL CONSTRUCTIONS

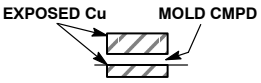


DETAIL B
OPTIONAL CONSTRUCTIONS

NOTES:
1. DIMENSIONING AND TOLERANCING PER ASME Y14.5M, 1994.
2. CONTROLLING DIMENSION: MILLIMETERS.
3. DIMENSION b APPLIES TO PLATED TERMINAL AND IS MEASURED BETWEEN 0.15 AND 0.30 mm FROM THE TERMINAL TIP.

| | MILLIMETERS | |
|---|---|---|
| DIM | MIN | MAX |
| A | 0.45 | 0.55 |
| A1 | 0.00 | 0.05 |
| A2 | 0.07 REF | |
| b | 0.20 | 0.30 |
| D | 1.45 BSC | |
| E | 1.00 BSC | |
| e | 0.50 BSC | |
| L | 0.30 | 0.40 |
| L1 | --- | 0.15 |

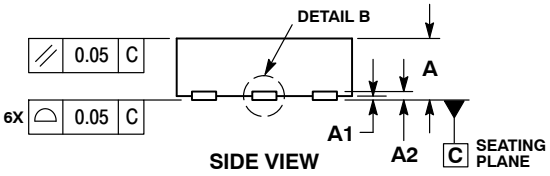


SIDE VIEW

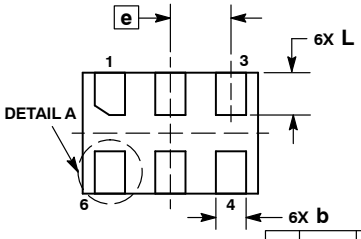


| | | | |
|---|---|---|---|
| ⊕ | 0.10 | C | A | B |
| | 0.05 | C | NOTE 3 | |

BOTTOM VIEW

### MOUNTING FOOTPRINT

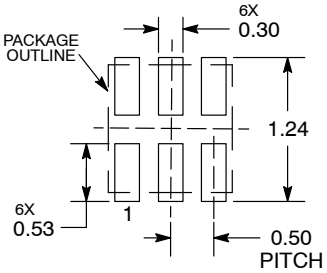


DIMENSIONS: MILLIMETERS

*For additional information on our Pb−Free strategy and soldering details, please download the **onsemi** Soldering and Mounting Techniques Reference Manual, SOLDERRM/D.

## PACKAGE DIMENSIONS

**UDFN6, 1x1, 0.35P**
CASE 517BX
ISSUE O

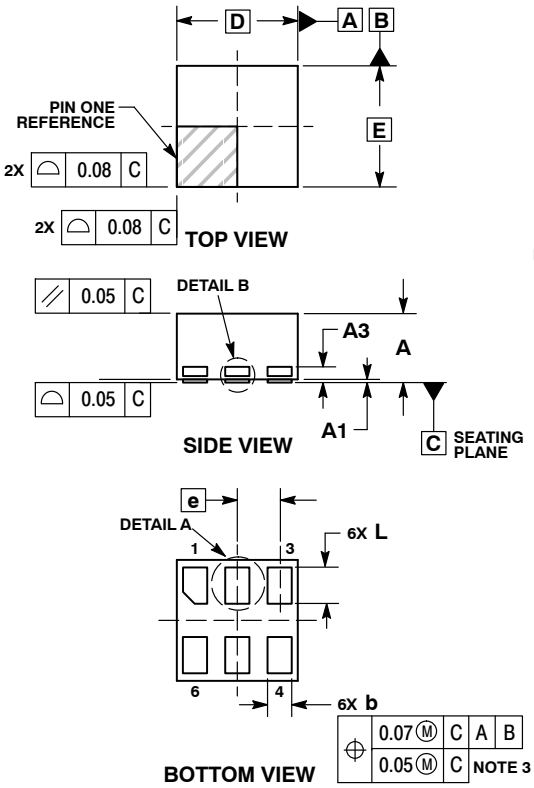


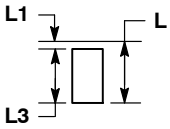


**DETAIL A**
**ALTERNATE TERMINAL CONSTRUCTION**

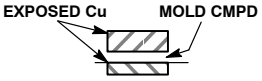


**DETAIL B**
**ALTERNATE CONSTRUCTION**

NOTES:
1. DIMENSIONING AND TOLERANCING PER ASME Y14.5M, 1994.
2. CONTROLLING DIMENSION: MILLIMETERS.
3. DIMENSION b APPLIES TO PLATED TERMINAL AND IS MEASURED BETWEEN 0.15 AND 0.20 MM FROM TERMINAL TIP.
4. PACKAGE DIMENSIONS EXCLUSIVE OF BURRS AND MOLD FLASH.

| | MILLIMETERS | |
|---|---|---|
| DIM | MIN | MAX |
| A | 0.50 | 0.65 |
| A1 | 0.00 | 0.05 |
| A3 | 0.13 REF | |
| b | 0.17 | 0.23 |
| D | 1.00 BSC | |
| E | 1.00 BSC | |
| e | 0.35 | |
| L | 0.20 | 0.40 |
| L1 | --- | 0.15 |
| L3 | 0.26 | 0.33 |

**RECOMMENDED SOLDERING FOOTPRINT***

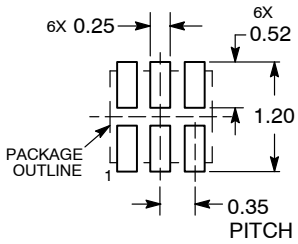


DIMENSION: MILLIMETERS

*For additional information on our Pb−Free strategy and soldering details, please download the **onsemi** Soldering and Mounting Techniques Reference Manual, SOLDERRM/D.

**SCALE 2:1**

**SC−74**
CASE 318F
ISSUE P

DATE 07 OCT 2021

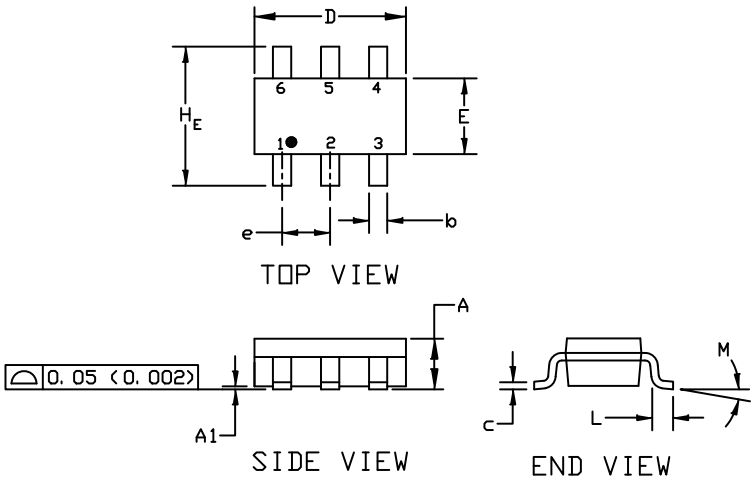


NOTES:
1. DIMENSIONING AND TOLERANCING PER ASME Y14.5M, 1994
2. CONTROLLING DIMENSION: INCHES
3. MAXIMUM LEAD THICKNESS INCLUDES LEAD FINISH THICKNESS. MINIMUM LEAD THICKNESS IS THE MINIMUM THICKNESS OF THE BASE MATERIAL.

| | MILLIMETERS | | | INCHES | | |
|---|---|---|---|---|---|---|
| DIM | MIN. | NOM. | MAX. | MIN. | NOM. | MAX. |
| A | 0.90 | 1.00 | 1.10 | 0.035 | 0.039 | 0.043 |
| A1 | 0.01 | 0.06 | 0.10 | 0.001 | 0.002 | 0.004 |
| b | 0.25 | 0.37 | 0.50 | 0.010 | 0.015 | 0.020 |
| c | 0.10 | 0.18 | 0.26 | 0.004 | 0.007 | 0.010 |
| D | 2.90 | 3.00 | 3.10 | 0.114 | 0.118 | 0.122 |
| E | 1.30 | 1.50 | 1.70 | 0.051 | 0.059 | 0.067 |
| e | 0.85 | 0.95 | 1.05 | 0.034 | 0.037 | 0.041 |
| $H_E$ | 2.50 | 2.75 | 3.00 | 0.099 | 0.108 | 0.118 |
| L | 0.20 | 0.40 | 0.60 | 0.008 | 0.016 | 0.024 |
| M | 0° | --- | 10° | 0° | --- | 10° |

**GENERIC**
**MARKING DIAGRAM***

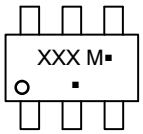


XXX = Specific Device Code
M = Date Code
▪ = Pb−Free Package

(Note: Microdot may be in either location)

*This information is generic. Please refer to device data sheet for actual part marking. Pb−Free indicator, “G” or microdot “▪”, may or may not be present. Some products may not follow the Generic Marking.

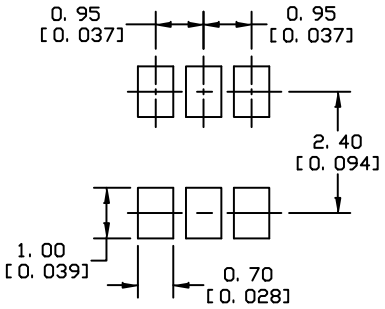


* For additional information on our Pb-Free strategy and soldering details, please download the ON Semiconductor Soldering and Mounting Techniques Reference Manual, SOLDERRM/D.

SOLDERING FOOTPRINT

STYLE 1:
PIN 1. CATHODE
2. ANODE
3. CATHODE
4. CATHODE
5. ANODE
6. CATHODE

STYLE 2:
PIN 1. NO CONNECTION
2. COLLECTOR
3. EMITTER
4. NO CONNECTION
5. COLLECTOR
6. BASE

STYLE 3:
PIN 1. EMITTER 1
2. BASE 1
3. COLLECTOR 2
4. EMITTER 2
5. BASE 2
6. COLLECTOR 1

STYLE 4:
PIN 1. COLLECTOR 2
2. EMITTER 1/EMITTER 2
3. COLLECTOR 1
4. EMITTER 3
5. BASE 1/BASE 2/COLLECTOR 3
6. BASE 3

STYLE 5:
PIN 1. CHANNEL 1
2. ANODE
3. CHANNEL 2
4. CHANNEL 3
5. CATHODE
6. CHANNEL 4

STYLE 6:
PIN 1. CATHODE
2. ANODE
3. CATHODE
4. CATHODE
5. CATHODE
6. CATHODE

STYLE 7:
PIN 1. SOURCE 1
2. GATE 1
3. DRAIN 2
4. SOURCE 2
5. GATE 2
6. DRAIN 1

STYLE 8:
PIN 1. EMITTER 1
2. BASE 2
3. COLLECTOR 2
4. EMITTER 2
5. BASE 1
6. COLLECTOR 1

STYLE 9:
PIN 1. EMITTER 2
2. BASE 2
3. COLLECTOR 1
4. EMITTER 1
5. BASE 1
6. COLLECTOR 2

STYLE 10:
PIN 1. ANODE/CATHODE
2. BASE
3. EMITTER
4. COLLECTOR
5. ANODE
6. CATHODE

STYLE 11:
PIN 1. EMITTER
2. BASE
3. ANODE/CATHODE
4. ANODE
5. CATHODE
6. COLLECTOR

| | | |
|---|---|---|
| **DOCUMENT NUMBER:** | **98ASB42973B** | Electronic versions are uncontrolled except when accessed directly from the Document Repository. Printed versions are uncontrolled except when stamped “CONTROLLED COPY” in red. |
| **DESCRIPTION:** | **SC−74** | **PAGE 1 OF 1** |

**onsemi** and onsemi are trademarks of Semiconductor Components Industries, LLC dba **onsemi** or its subsidiaries in the United States and/or other countries. **onsemi** reserves the right to make changes without further notice to any products herein. **onsemi** makes no warranty, representation or guarantee regarding the suitability of its products for any particular purpose, nor does **onsemi** assume any liability arising out of the application or use of any product or circuit, and specifically disclaims any and all liability, including without limitation special, consequential or incidental damages. **onsemi** does not convey any license under its patent rights nor the rights of others.

**SC−88/SC70−6/SOT−363**
CASE 419B−02
ISSUE Y

DATE 11 DEC 2012

1
**SCALE 2:1**

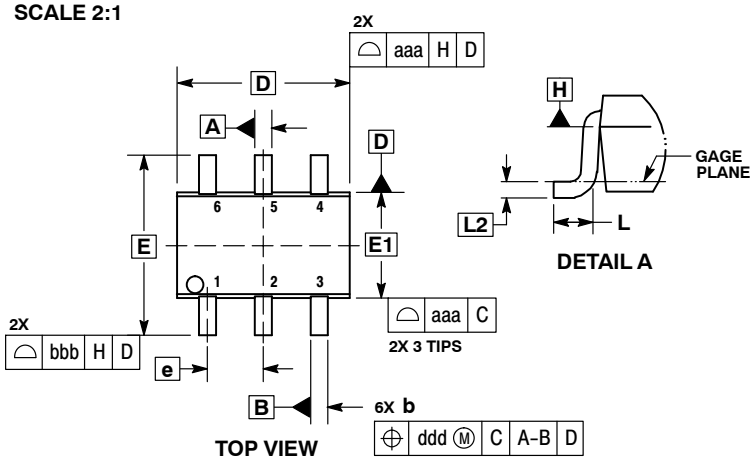


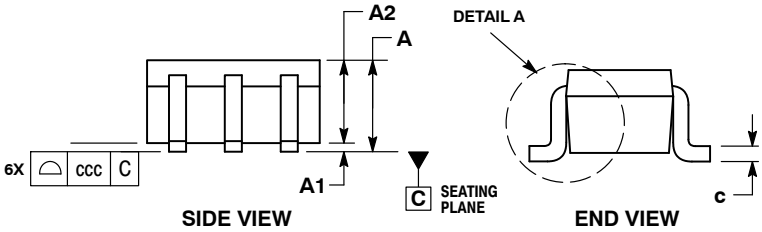


NOTES:
1. DIMENSIONING AND TOLERANCING PER ASME Y14.5M, 1994.
2. CONTROLLING DIMENSION: MILLIMETERS.
3. DIMENSIONS D AND E1 DO NOT INCLUDE MOLD FLASH, PROTRUSIONS, OR GATE BURRS. MOLD FLASH, PROTRUSIONS, OR GATE BURRS SHALL NOT EXCEED 0.20 PER END.
4. DIMENSIONS D AND E1 AT THE OUTERMOST EXTREMES OF THE PLASTIC BODY AND DATUM H.
5. DATUMS A AND B ARE DETERMINED AT DATUM H.
6. DIMENSIONS b AND c APPLY TO THE FLAT SECTION OF THE LEAD BETWEEN 0.08 AND 0.15 FROM THE TIP.
7. DIMENSION b DOES NOT INCLUDE DAMBAR PROTRUSION. ALLOWABLE DAMBAR PROTRUSION SHALL BE 0.08 TOTAL IN EXCESS OF DIMENSION b AT MAXIMUM MATERIAL CONDITION. THE DAMBAR CANNOT BE LOCATED ON THE LOWER RADIUS OF THE FOOT.

| | MILLIMETERS | | | INCHES | | |
|---|---|---|---|---|---|---|
| DIM | MIN | NOM | MAX | MIN | NOM | MAX |
| A | −−− | −−− | 1.10 | −−− | −−− | 0.043 |
| A1 | 0.00 | −−− | 0.10 | 0.000 | −−− | 0.004 |
| A2 | 0.70 | 0.90 | 1.00 | 0.027 | 0.035 | 0.039 |
| b | 0.15 | 0.20 | 0.25 | 0.006 | 0.008 | 0.010 |
| C | 0.08 | 0.15 | 0.22 | 0.003 | 0.006 | 0.009 |
| D | 1.80 | 2.00 | 2.20 | 0.070 | 0.078 | 0.086 |
| E | 2.00 | 2.10 | 2.20 | 0.078 | 0.082 | 0.086 |
| E1 | 1.15 | 1.25 | 1.35 | 0.045 | 0.049 | 0.053 |
| e | 0.65 BSC | | | 0.026 BSC | | |
| L | 0.26 | 0.36 | 0.46 | 0.010 | 0.014 | 0.018 |
| L2 | 0.15 BSC | | | 0.006 BSC | | |
| aaa | 0.15 | | | 0.006 | | |
| bbb | 0.30 | | | 0.012 | | |
| ccc | 0.10 | | | 0.004 | | |
| ddd | 0.10 | | | 0.004 | | |

**RECOMMENDED SOLDERING FOOTPRINT***

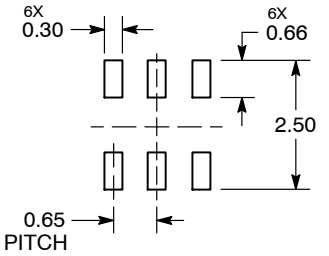


DIMENSIONS: MILLIMETERS

*For additional information on our Pb−Free strategy and soldering details, please download the ON Semiconductor Soldering and Mounting Techniques Reference Manual, SOLDERRM/D.

**GENERIC MARKING DIAGRAM***

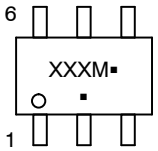


XXX = Specific Device Code
M = Date Code*
▪ = Pb−Free Package

(Note: Microdot may be in either location)

*Date Code orientation and/or position may vary depending upon manufacturing location.

*This information is generic. Please refer to device data sheet for actual part marking. Pb−Free indicator, “G” or microdot “▪”, may or may not be present. Some products may not follow the Generic Marking.

**STYLES ON PAGE 2**

| | | |
|---|---|---|
| **DOCUMENT NUMBER:** | **98ASB42985B** | Electronic versions are uncontrolled except when accessed directly from the Document Repository. Printed versions are uncontrolled except when stamped “CONTROLLED COPY” in red. |
| **DESCRIPTION:** | **SC−88/SC70−6/SOT−363** | **PAGE 1 OF 2** |

**onsemi** and onsemi are trademarks of Semiconductor Components Industries, LLC dba **onsemi** or its subsidiaries in the United States and/or other countries. **onsemi** reserves the right to make changes without further notice to any products herein. **onsemi** makes no warranty, representation or guarantee regarding the suitability of its products for any particular purpose, nor does **onsemi** assume any liability arising out of the application or use of any product or circuit, and specifically disclaims any and all liability, including without limitation special, consequential or incidental damages. **onsemi** does not convey any license under its patent rights nor the rights of others.

**SC−88/SC70−6/SOT−363**
CASE 419B−02
ISSUE Y

DATE 11 DEC 2012

STYLE 1:
PIN 1. EMITTER 2
2. BASE 2
3. COLLECTOR 1
4. EMITTER 1
5. BASE 1
6. COLLECTOR 2

STYLE 2:
CANCELLED

STYLE 3:
CANCELLED

STYLE 4:
PIN 1. CATHODE
2. CATHODE
3. COLLECTOR
4. EMITTER
5. BASE
6. ANODE

STYLE 5:
PIN 1. ANODE
2. ANODE
3. COLLECTOR
4. EMITTER
5. BASE
6. CATHODE

STYLE 6:
PIN 1. ANODE 2
2. N/C
3. CATHODE 1
4. ANODE 1
5. N/C
6. CATHODE 2

STYLE 7:
PIN 1. SOURCE 2
2. DRAIN 2
3. GATE 1
4. SOURCE 1
5. DRAIN 1
6. GATE 2

STYLE 8:
CANCELLED

STYLE 9:
PIN 1. EMITTER 2
2. EMITTER 1
3. COLLECTOR 1
4. BASE 1
5. BASE 2
6. COLLECTOR 2

STYLE 10:
PIN 1. SOURCE 2
2. SOURCE 1
3. GATE 1
4. DRAIN 1
5. DRAIN 2
6. GATE 2

STYLE 11:
PIN 1. CATHODE 2
2. CATHODE 2
3. ANODE 1
4. CATHODE 1
5. CATHODE 1
6. ANODE 2

STYLE 12:
PIN 1. ANODE 2
2. ANODE 2
3. CATHODE 1
4. ANODE 1
5. ANODE 1
6. CATHODE 2

STYLE 13:
PIN 1. ANODE
2. N/C
3. COLLECTOR
4. EMITTER
5. BASE
6. CATHODE

STYLE 14:
PIN 1. VREF
2. GND
3. GND
4. IOUT
5. VEN
6. VCC

STYLE 15:
PIN 1. ANODE 1
2. ANODE 2
3. ANODE 3
4. CATHODE 3
5. CATHODE 2
6. CATHODE 1

STYLE 16:
PIN 1. BASE 1
2. EMITTER 2
3. COLLECTOR 2
4. BASE 2
5. EMITTER 1
6. COLLECTOR 1

STYLE 17:
PIN 1. BASE 1
2. EMITTER 1
3. COLLECTOR 2
4. BASE 2
5. EMITTER 2
6. COLLECTOR 1

STYLE 18:
PIN 1. VIN1
2. VCC
3. VOUT2
4. VIN2
5. GND
6. VOUT1

STYLE 19:
PIN 1. I OUT
2. GND
3. GND
4. V CC
5. V EN
6. V REF

STYLE 20:
PIN 1. COLLECTOR
2. COLLECTOR
3. BASE
4. EMITTER
5. COLLECTOR
6. COLLECTOR

STYLE 21:
PIN 1. ANODE 1
2. N/C
3. ANODE 2
4. CATHODE 2
5. N/C
6. CATHODE 1

STYLE 22:
PIN 1. D1 (i)
2. GND
3. D2 (i)
4. D2 (c)
5. VBUS
6. D1 (c)

STYLE 23:
PIN 1. Vn
2. CH1
3. Vp
4. N/C
5. CH2
6. N/C

STYLE 24:
PIN 1. CATHODE
2. ANODE
3. CATHODE
4. CATHODE
5. CATHODE
6. CATHODE

STYLE 25:
PIN 1. BASE 1
2. CATHODE
3. COLLECTOR 2
4. BASE 2
5. EMITTER
6. COLLECTOR 1

STYLE 26:
PIN 1. SOURCE 1
2. GATE 1
3. DRAIN 2
4. SOURCE 2
5. GATE 2
6. DRAIN 1

STYLE 27:
PIN 1. BASE 2
2. BASE 1
3. COLLECTOR 1
4. EMITTER 1
5. EMITTER 2
6. COLLECTOR 2

STYLE 28:
PIN 1. DRAIN
2. DRAIN
3. GATE
4. SOURCE
5. DRAIN
6. DRAIN

STYLE 29:
PIN 1. ANODE
2. ANODE
3. COLLECTOR
4. EMITTER
5. BASE/ANODE
6. CATHODE

STYLE 30:
PIN 1. SOURCE 1
2. DRAIN 2
3. DRAIN 2
4. SOURCE 2
5. GATE 1
6. DRAIN 1

Note: Please refer to datasheet for style callout. If style type is not called out in the datasheet refer to the device datasheet pinout or pin assignment.

| | | |
|---|---|---|
| **DOCUMENT NUMBER:** | **98ASB42985B** | Electronic versions are uncontrolled except when accessed directly from the Document Repository. Printed versions are uncontrolled except when stamped "CONTROLLED COPY" in red. |
| **DESCRIPTION:** | **SC−88/SC70−6/SOT−363** | **PAGE 2 OF 2** |

**onsemi** and onsemi are trademarks of Semiconductor Components Industries, LLC dba **onsemi** or its subsidiaries in the United States and/or other countries. **onsemi** reserves the right to make changes without further notice to any products herein. **onsemi** makes no warranty, representation or guarantee regarding the suitability of its products for any particular purpose, nor does **onsemi** assume any liability arising out of the application or use of any product or circuit, and specifically disclaims any and all liability, including without limitation special, consequential or incidental damages. **onsemi** does not convey any license under its patent rights nor the rights of others.

**onsemi**, onsemi, and other names, marks, and brands are registered and/or common law trademarks of Semiconductor Components Industries, LLC dba "**onsemi**" or its affiliates and/or subsidiaries in the United States and/or other countries. **onsemi** owns the rights to a number of patents, trademarks, copyrights, trade secrets, and other intellectual property. A listing of **onsemi**'s product/patent coverage may be accessed at www.onsemi.com/site/pdf/Patent−Marking.pdf. **onsemi** reserves the right to make changes at any time to any products or information herein, without notice. The information herein is provided "as−is" and **onsemi** makes no warranty, representation or guarantee regarding the accuracy of the information, product features, availability, functionality, or suitability of its products for any particular purpose, nor does **onsemi** assume any liability arising out of the application or use of any product or circuit, and specifically disclaims any and all liability, including without limitation special, consequential or incidental damages. Buyer is responsible for its products and applications using **onsemi** products, including compliance with all laws, regulations and safety requirements or standards, regardless of any support or applications information provided by **onsemi**. "Typical" parameters which may be provided in **onsemi** data sheets and/or specifications can and do vary in different applications and actual performance may vary over time. All operating parameters, including "Typicals" must be validated for each customer application by customer's technical experts. **onsemi** does not convey any license under any of its intellectual property rights nor the rights of others. **onsemi** products are not designed, intended, or authorized for use as a critical component in life support systems or any FDA Class 3 medical devices or medical devices with a same or similar classification in a foreign jurisdiction or any devices intended for implantation in the human body. Should Buyer purchase or use **onsemi** products for any such unintended or unauthorized application, Buyer shall indemnify and hold **onsemi** and its officers, employees, subsidiaries, affiliates, and distributors harmless against all claims, costs, damages, and expenses, and reasonable attorney fees arising out of, directly or indirectly, any claim of personal injury or death associated with such unintended or unauthorized use, even if such claim alleges that **onsemi** was negligent regarding the design or manufacture of the part. **onsemi** is an Equal Opportunity/Affirmative Action Employer. This literature is subject to all applicable copyright laws and is not for resale in any manner.

## ADDITIONAL INFORMATION

**TECHNICAL PUBLICATIONS**:
**Technical Library:** www.onsemi.com/design/resources/technical−documentation
**onsemi Website:** www.onsemi.com

**ONLINE SUPPORT**: www.onsemi.com/support
**For additional information, please contact your local Sales Representative at**
www.onsemi.com/support/sales