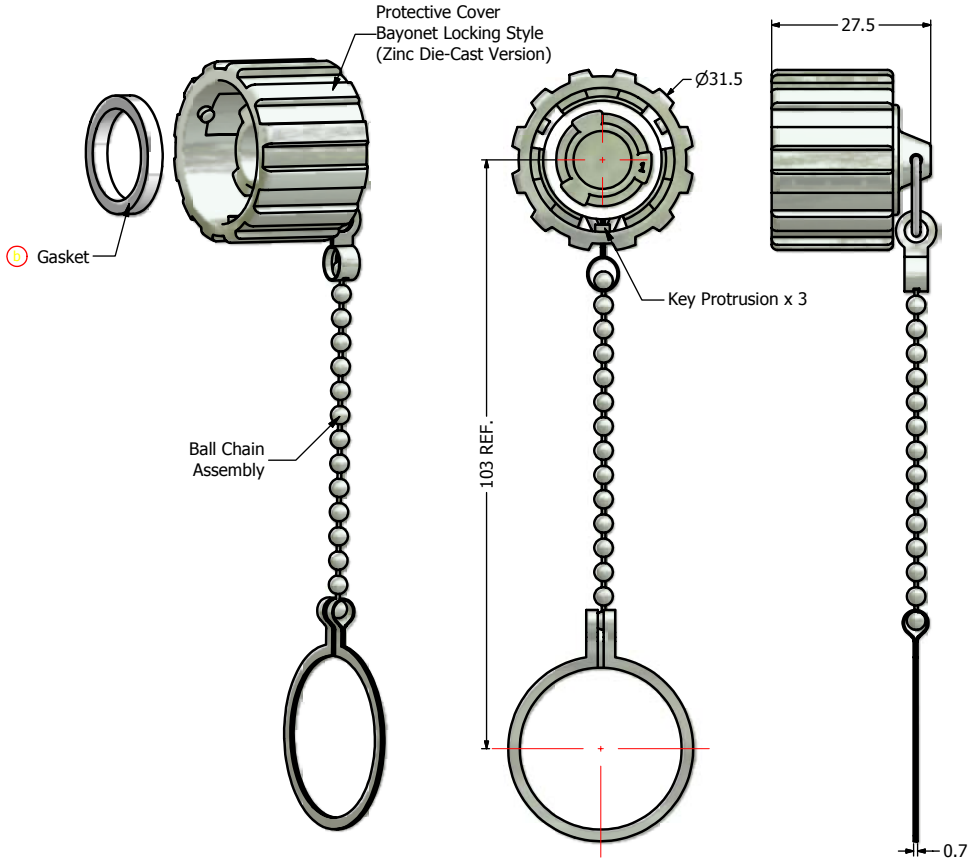

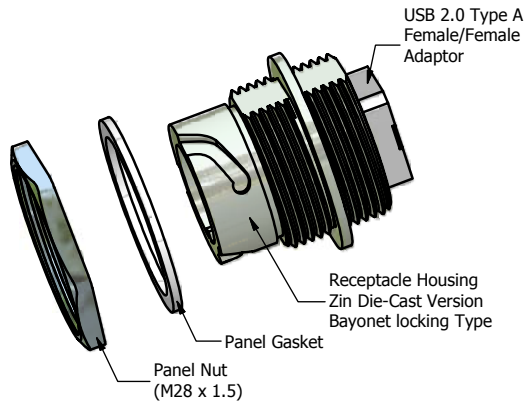

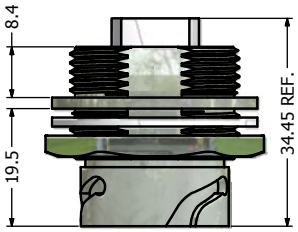

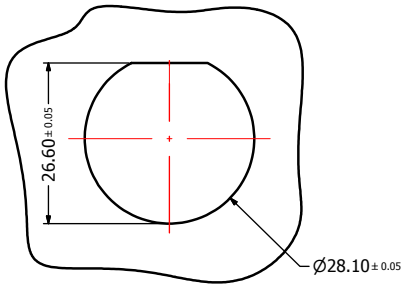

Recommended Panel Cutout

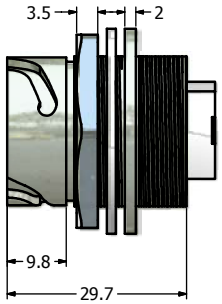

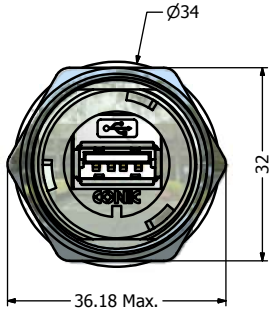

Notes:

1. Electrical Specifications:
   - Meets EIA/TIA-568-B.2 Cat.5e Specification
   - Contact Resistance: 20mOhm max.
   - Insulation Resistance: 500MOhm min. @ 100 VDC
   - Current Rating: 1.2A max. at 25˚C
   - Working Voltage: 100 VDC
   - DWV: 1000 VDC/60s Contact to Contact, 1500 VDC/60s Contact to Metal Shell
   - Operating Temperature: -40˚C to +85˚C
2. Material and Finish:
   - Receptacle Housing & Protective Cover: Zinc Die-Cast, Finish: Nickel Plated
   - Ball Chain Assemby: Copper Alloy (Nickel Plated) and Stainless Steel
   - Panel Nut: Brass, Finish: Nickel Plated
   - Panel Gasket: Silicone, Color: White
   - Gasket for Cover: Silcone, Color: White
   - USB Adaptor Insulator: PBT, UL94 V-0, Black
   - USB Adaptor Metal Shell: Copper Alloy, Nickel Plated
   - USB Adaptor Overmold: PBT UL94 V-0, Black
   - USB Contacts: Copper Alloy, Finish: 30 u" Gold min. over Nickel
3. Connector can be front or rear mounted to a maximum panel thickness of 3.2mm.
4. RoHS compliant
5. IP67 rated when covered or fully mated with the appropriate mating connector

Pin-Assingment

Type A F		Type A F
Pin1	---------	Pin1
Pin2	---------	Pin2
Pin3	---------	Pin3
Pin4	---------	Pin4
Shell	---------	Shell

Directive 2002/95/EC
"RoHS"
Compliant

THIS DRAWING MAY NOT BE COPIED OR REPRODUCED IN ANY WAY, AND MAY NOT BE PASSED ON TO A THIRD PARTY WITHOUT WRITTEN PERMISSION. OWNERSHIP AND COPYRIGHT OF CONEC CORPORATION

DO NOT ALTER CAD DRAWING BY HAND

Customer:			
Name	Title	Approval Date	

Rev.	Changes	Date	Name
a	original		

Tolerance
Unless otherwise specified
0 PLC ± 0.50
1 PLC ± 0.38
2 PLC ± 0.25
3 PLC ± 0.10
ANGLES ± 3˚

2010	Date	Name
Draw.	Mar. 16	Vincent Ke
Appd.	Mar. 16	J. Chaudry
Norm		
D-old		

Autodesk Inventor

CONEC®

Scale: 1.2:1 | Dim. in mm

Material: See Notes

Title: IP67 USB Receptacle & Cover Kit with USB 2.0 Type A F/F Adaptor
Zinc Die-Cast Version

Drawing No.: 17K1A156 | DIN A3

Part No.: 17-200611 | Sheet 1/1