THIS DRAWING IS A CONTROLLED DOCUMENT.

LOC	DIST
AD	25

REVISIONS

P	LTR	DESCRIPTION	DATE	DWN	APVD
	0	DRAWN	-	-	-

1. WIRE BARREL WILL ACCEPT 16-18 AWG WIRE.
2. MATES WITH PART NUMBER 148410-1.
3. RECOMMENDED CRIMPING TOOL: DANIELS TOOL #FT8, POSITIONER P/N TP731, SETTING #7 (16 AWG), #6 (18 AWG), STRIP LG 8.13[.320].

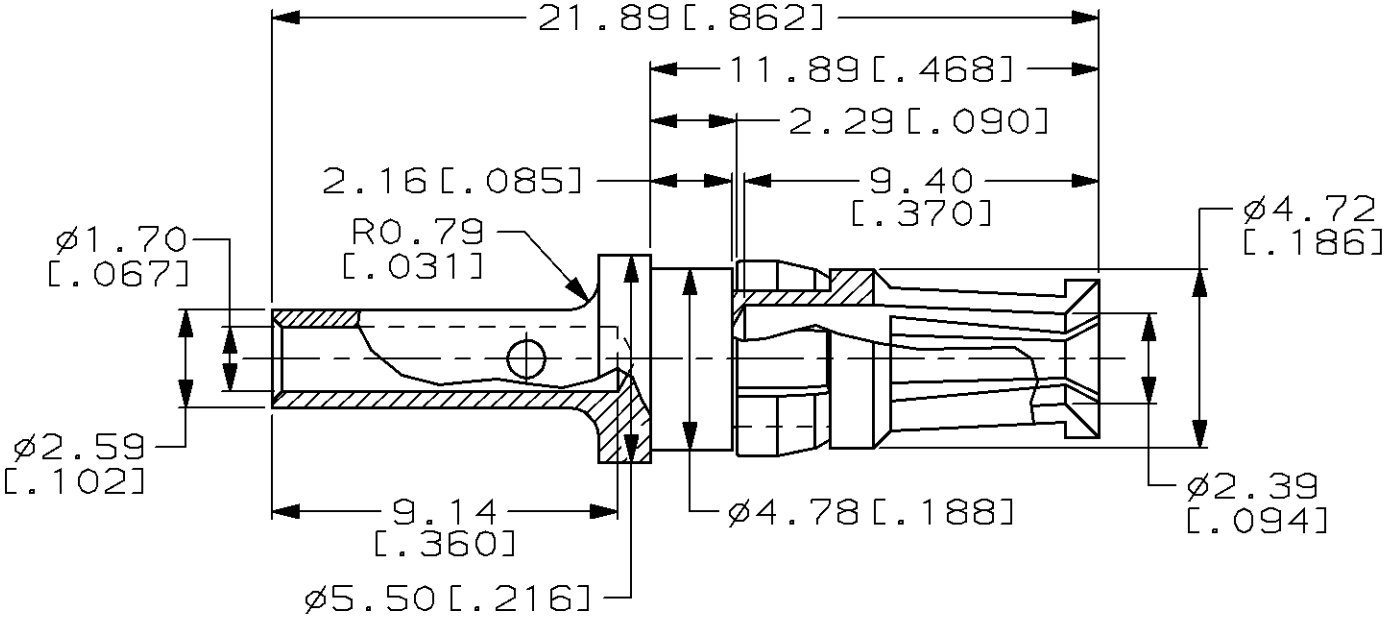

CONT AREA FINISH	MATERIAL	PART NUMBER
0.00076[.000030] GOLD	CONTACT; BERYLLIUM COPPER RETAINING RING; BERYLLIUM COPPER	148416-1

THIS DRAWING IS UNPUBLISHED. © COPYRIGHT 19 BY AMP INCORPORATED. ALL RIGHTS RESERVED. RELEASED FOR PUBLICATION ,19 .

DIMENSIONS: mm

TOLERANCES UNLESS OTHERWISE SPECIFIED:

0 PLC	±-
1 PLC	±-
2 PLC	±0.13[.005]
3 PLC	±-
4 PLC	±-
ANGLES	±-

DWN L. BRINER 10/14/97
CHK R. PATTERSON 10/14/97
APVD R. PATTERSON 10/14/97
PRODUCT SPEC –
APPLICATION SPEC –
WEIGHT –

MATERIAL –
FINISH –

AMP Incorporated
Harrisburg, PA 17105-3608

NAME CONTACT, EUROCARD, SOCKET, CRIMP, TYPE M, 10 AMP

SIZE	CAGE CODE	DRAWING NO	RESTRICTED TO
A4	00779	C-148416	–

CUSTOMER DRAWING

SCALE 5:1 SHEET 1 OF 1 REV 0

AMP 1469-35 REV 27JUN96